city of CINCINNATI
BUILDINGS & INSPECTIONS

APPROVED
CIN BD
2022P03573
02/01/23

modelgroup

Mr. John Schueler, R.A.
Senior Building Plans Examiner
Buildings and Inspections
City of Cincinnati
Two Centennial Plaza, 805 Central Ave, Suite 500
Cincinnati, OH 45202

RE: Permit 2022P03573 R _ Engineering Change EC#1

Dear John,

We've uploaded Revisions for Engineering Change 01. These have the Delta of #3. We have addressed these below. We also are submitting changes to Two apartments with this revision. The Apartment count stays the same.

Review Comments

1. Clarify Kitchen Hood: See Drawing A203, General Note M stating ALL kitchen hoods are recirculating.

2. Trash Chute: See Drawing A502. This eliminates the Trash Chute from the engineering change. The 2-hr rated shaft will remain.

3. Clarify Laundry Dryers: See Drawing A203, General Note N stating ALL Laundry Dryers are electric and ventless.

4. Additional Changes:
   a. See Sheet A203: We removed Apartments A.1 & C and replaced these with Apartments G.1 & Q.
   b. New Drawings added for enlarged apartment plans include: A316.1, A316.2, & A317.
   c. The above changes affected drawings:
      - TS: Drawing Index
        - Removed A301.1
        - Removed A302
        - Added A316(1) Apartment G.1
        - Added A316(2) Apartment G.1
        - Added A317 Apartment Q
      - & LS-103: Updated 1/LS-103 for new apartment layouts.

Please let us know if there is anything else you need.

Sincerely,
The Model Group

Joseph A. Bodkin, RA
The Model Group

513.559.0048 tel 1826 Race Street
513.559.0840 fax Cincinnati, Ohio 45202

The Formica Building

Auditor Address: 115 E. 5th Street
Actual Address: 120 E. 4th Street
Cincinnati Ohio 45202

Office & Apartments

Architectural Permit Set
04.25.2022
Engineering Change #1
11.14.2022

Owner	Project Architect	Historic Consultant	Code Consultant	Contractor
MCA, LLC 1826 Race Street Cincinnati Ohio 45202	The Model Group 1826 Race Street Cincinnati, Ohio 45202	Common Bond Consulting, LLC 4232 Florida Ave. Cincinnati, Ohio 45223	Dabdoub & Associates, LLC 7357 E. Kemper Rd, Suite A Cincinnati, Ohio 45249	Model Construction 1826 Race Street Cincinnati, Ohio 45202

LOCATION MAP

Project Location

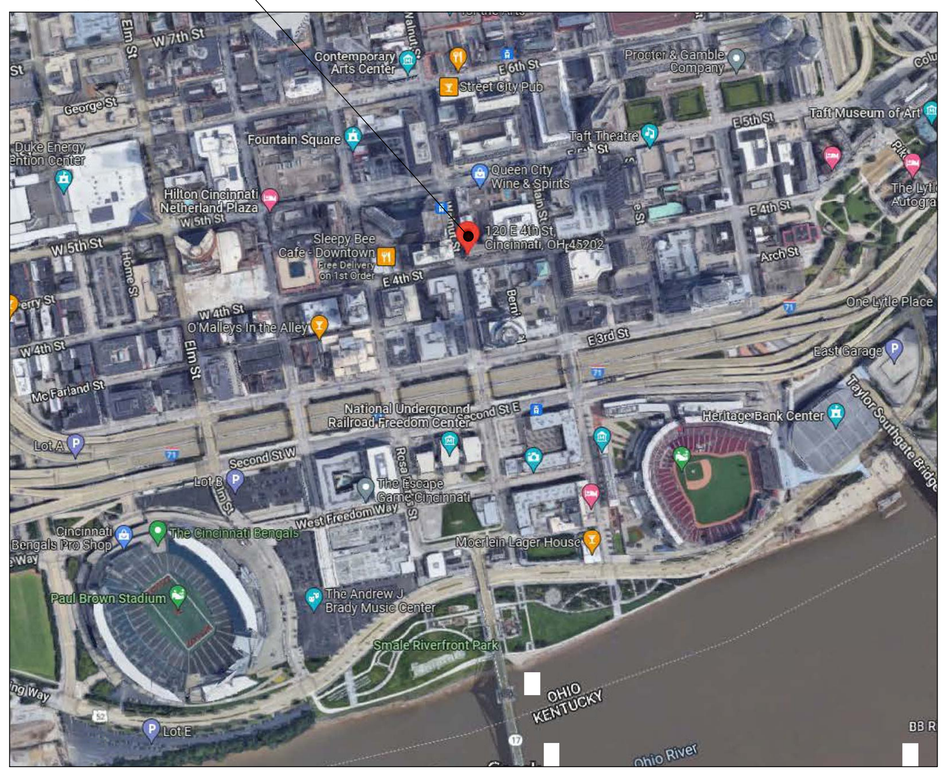

VICINITY MAP

115 E. 5th Street

120 E. 4th Street

PROJECT INFORMATION

PROJECT SCOPE:

PROJECT IS THE CONVERSION OF SEVEN FLOORS (7–13) OF THE FORMICA BUILDING TOWER INTO STUDIO, 1 & 2–BEDROOM APARTMENTS. THE CURRENT OFFICES ON FLOORS THREE TO SIX WILL BE CLEARED OUT INTO "WHITE BOX" OPEN FLOOR PLANS THAT ARE OFFICE TENANT READY. EXISTING ELEVATORS WILL REMAIN AS IS. THERE IS NO EXTERIOR WORK AND NO WORK IN THE BASEMENT, FIRST FLOOR AND SECOND FLOOR INCLUDING THE ARCADE, BUSINESSES AND EVENT SPACE ON THE 5TH STREET SIDE.

NOTE: ALL MECHANICAL, PLUMBING, ELECTRICAL, FIRE SUPPRESSION, ALARM SYSTEMS ARE DESIGN/BUILD

DRAWING INDEX

TS	TITLE SHEET	
GN	GENERAL NOTES	
AS	ARCHITECTURAL STANDARDS	
A100	SURVEY/SITE PLAN	
LS–1	CODE & LIFE/SAFETY PLAN	
LS–2	CODE & LIFE/SAFETY PLAN	
LS–3	CODE & LIFE/SAFETY PLAN	
LS–4	CODE & LIFE/SAFETY PLAN	
D100	BASEMENT DEMOLITION PLAN	
D101	1ST FLOOR DEMOLITION PLAN	
D102	2ND FLOOR DEMOLITION PLAN	
D103	3RD & 4TH FLOOR DEMOLITION PLAN	
D104	5TH & 6TH FLOOR DEMOLITION PLAN	
D105	7TH & 8TH FLOOR DEMOLITION PLAN	
D106	9TH & 10TH FLOOR DEMOLITION PLAN	
D107	11TH & 12TH FLOOR DEMOLITION PLAN	
D108	13TH & 4TH FLOOR DEMOLITION PLAN	
D109	ROOF DEMOLITION PLAN	
A200	BASEMENT CONSTRUCTION PLAN	
A201	1ST FLOOR CONSTRUCTION PLAN	
A202	2ND FLOOR CONSTRUCTION PLAN	
A203	3RD, 4TH, 5TH & 6TH TYPICAL FLOOR CONSTRUCTION PLANS	
A204	7TH, 8TH, 9TH, 10TH, 11TH & 12TH TYPICAL FLOOR CONSTRUCTION PLANS	
A205	13TH FLOOR CONSTRUCTION PLAN	
A206	ROOF CONSTRUCTION PLAN	
A300.1	DELETED	
A300.2	TYPE A:	ENLARGED APARTMENT CONSTRUCTION PLAN
A301.1	TYPE B.1:	ENLARGED APARTMENT CONSTRUCTION PLAN
A301 ADA	TYPE B ADA:	ENLARGED APARTMENT CONSTRUCTION PLAN
A301.2	TYPE B.2:	ENLARGED APARTMENT CONSTRUCTION PLAN
A302	DELETED	
A303	TYPE D:	ENLARGED APARTMENT CONSTRUCTION PLAN
A304	TYPE E:	ENLARGED APARTMENT CONSTRUCTION PLAN
A305.1	TYPE F:	ENLARGED APARTMENT CONSTRUCTION PLAN
A305.2	TYPE F.2:	ENLARGED APARTMENT CONSTRUCTION PLAN
A306(1)	TYPE G:	ENLARGED APARTMENT CONSTRUCTION PLAN
A306(2)	TYPE G:	ENLARGED APARTMENT CONSTRUCTION ELEVATIONS
A307.1	TYPE H:	ENLARGED APARTMENT CONSTRUCTION PLAN FLOOR 11
A307.2	TYPE H:	ENLARGED APARTMENT CONSTRUCTION PLAN
A308.1	TYPE I:	ENLARGED APARTMENT CONSTRUCTION PLAN FLOOR 11
A308.2	TYPE I:	ENLARGED APARTMENT CONSTRUCTION PLAN
A309.1	TYPE J:	ENLARGED APARTMENT CONSTRUCTION PLAN FLOOR 11
A309.2	TYPE J:	ENLARGED APARTMENT CONSTRUCTION PLAN
A310.1	TYPE K:	ENLARGED APARTMENT CONSTRUCTION PLAN FLOOR 11
A310.2	TYPE K:	ENLARGED APARTMENT CONSTRUCTION PLAN
A311	TYPE L:	ENLARGED APARTMENT CONSTRUCTION PLAN
A312(1)	TYPE M:	ENLARGED APARTMENT CONSTRUCTION PLAN
A312(2)	TYPE M:	ENLARGED APARTMENT CONSTRUCTION ELEVATIONS
A313(1)	TYPE N:	ENLARGED APARTMENT CONSTRUCTION PLAN
A313(2)	TYPE N:	ENLARGED APARTMENT CONSTRUCTION ELEVATIONS
A314(1)	TYPE O:	ENLARGED APARTMENT CONSTRUCTION PLAN
A314(2)	TYPE O:	ENLARGED APARTMENT CONSTRUCTION ELEVATIONS
A315(1)	TYPE P:	ENLARGED APARTMENT CONSTRUCTION PLAN
A315(2)	TYPE P:	ENLARGED APARTMENT CONSTRUCTION ELEVATIONS
A316.1	TYPE G.1:	ENLARGED APARTMENT CONSTRUCTION PLAN
A316.2	TYPE G.1:	ENLARGED APARTMENT CONSTRUCTION ELEVATIONS
A317	TYPE Q:	ENLARGED APARTMENT CONSTRUCTION PLAN
A401	EXTERIOR ELEVATIONS	
A402	EXTERIOR ELEVATIONS	
A403	EXTERIOR ELEVATIONS	
A500	SECTIONS & DETAILS	
A501	SECTIONS & DETAILS	
A502	DETAILS	
A600	DOOR SCHEDULE	
A601	PARTITION TYPES	
A700	REFLECTED CEILING PLAN – BASEMENT	
A701	REFLECTED CEILING PLAN – 1ST FLOOR	
A702	REFLECTED CEILING PLAN – 2ND FLOOR	
A703	REFLECTED CEILING PLANS – 3RD, THRU 6TH FLOORS	
A704	REFLECTED CEILING PLANS – 7TH THRU 11TH FLOORS	
A705	REFLECTED CEILING PLANS – 12TH & 13TH FLOORS	
A706	REFLECTED CEILING PLANS – 12TH & 13TH FLOORS	
A800	INTERIOR ELEVATIONS – COMMON APARTMENT HALLWAYS	
A801	INTERIOR ELEVATIONS – COMMON APARTMENT HALLWAYS	
A802	INTERIOR ELEVATIONS – COMMON APARTMENT HALLWAYS	
A803	INTERIOR ELEVATIONS – COMMON APARTMENT HALLWAYS	
A900	FINISH PLAN – TYPICAL OFFICE FLOORS 3 TO 6	
A901	FINISH PLAN – TYPICAL COMMON AREA RESIDENTIAL FLOORS 7 TO 10	
A902	FINISH PLAN – TYPICAL COMMON AREA RESIDENTIAL FLOORS 11 TO 12	
A903	FINISH PLAN – TYPICAL COMMON AREA RESIDENTIAL FLOOR 13	

STATE OF OHIO JOSEPH A. BODKIN 3135567 REGISTERED ARCHITECT
Joseph A. Bodkin, License #3135567 Expiration Date: 12.31.2023

model group
DEVELOPMENT • CONSTRUCTION • MANAGEMENT
1826 Race Street
Cincinnati, Ohio 45202
513.559.0048

Formica Building
Office/Apartments
Auditor Address: 115 E. 5th Street, Actual Address: 120 E. 4th Street
Cincinnati OH 45202

No.	Revisions	Date
	PLAN REVIEW COMMENTS	07.05.2022
	ENG CHG #1	11.14.2022
	APARTMENT CHANGES	12.05.2022

Project: Formica Building
Auditor Address: 115 E. 5th Street
Cincinnati, Ohio 45202
Sheet Title: TITLE SHEET
Construction
Project No: 2022__259
Issue Date: 04.25.2022 – Permit Set
Scale: As Noted
Drawn:
Checked:

TS

APPROVED
CIN BD
2022P03573
02/01/23
city of CINCINNATI BUILDINGS & INSPECTIONS

C:\Users\jbodkin\Dropbox\01_MBG_Projects\2022_Formica_TS.dwg, TS, Plot Date/Time: Dec 13, 2022-1:43pm - By: jbodkin

CODE SUMMARY:

THE PROPOSED WORK IS A PART CHANGE OF OCCUPANCY PER SECTION 3408 OBC
THE PROPOSED PART CHANGE OF OCCUPANCY IS TO CHANGE FLOORS 7-13 FORM OFFICE-B USE TO APARTMENTS-R-2 USE, THERE WILL BE 52 APARTMENTS.
3408.3 EXISTING STAIRWAYS WILL BE MAINTAINED
3408.4 SNOW, WIND AND SEISMIC LOADS WILL NOT HAVE ANY IMPACT
3408 THE BUILDING IS CLASSIFIED AND APPROVED AS A HISTORIC BUILDING- SEE LETTER OF CERTIFICATION.
CHAPTER 3:

- THE EXISTING BUILDING CURRENTLY IS CLASSIFIED AS A-2/A-3/B/S-2, THE PROPOSED CHANGE IS TO CHANGE FLOORS 7-13 FROM B TO R-2, THE REST OF THE BUILDING WILL NOT BE CHANGED.
- THE BASEMENT HAS EXISTING S-2 USE AND IS ACCESSORY TO THE PRINCIPAL USE OF THE BUILDING. THERE IS NO WORK SCHEDULE IN THE BASEMENT FOR THIS PERMIT.
- SECTION 403.2 CONSTRUCTION TYPE IS IA WITH THE MODIFICATIONS THAT ARE PERMITTED , THE EXISTING STRUCTURE IS TWO HOURS RATED.
- 403.2.1.2 SHAFT ENCLOSURES ARE EXISTING –TWO HOURS
- 403.2.2 SEISMIC PROVISIONS N/A
- 403.2.3 N/A
- 403.2.,4 SPRAYED FIRE RESISTANCE FOR THE TWO HOURS ARE MAINTAINED/EXISTING
- 403.3 AUTOMATIC SPRINKLER SYSTEM : THE BUILDING IS FULLY SUPPRESSES, THE R-2 USE SPRINKLER SYSTEM WILL BE DESIGNED PER NFPA 13 AND WILL BE SUBMITTED BY THE SPRINKLER CONTRACTOR
- 403.3.2 WATER SUPPLY IS ADEQUATE AND WILL BE MAINTAINED
- 403.3.4 FIRE PUMP ROOM IS EXISTING, THE FIRE PUMP WILL BE REPLACED WITH A NEW FIRE PUMP.
- 403.4 EMERGENCY SYSTEM: EXISTING , NEW SYSTEM WILL BE INSTALLED IN THE R-2 USES, SEPARATE PERMIT WILL BE APPLIED .
- 403.4.1 SMOKE DETECTORS WILL BE INSTALLED PER SECTION 907.2.13.1
- 403.4.2 FIRE ALARM SYSTEM WILL BE UPGRADED AND NEW SYSTEM WILL BE INSTALLED IN THE R-2 USE
- 403.4.3 STANDPIPE SYSTEM IS EXISTING
- 403.4.4 EMERGENCY VOICE/ALARM COMMUNICATION SYSTEM WILL BE MODIFIES PER SECTION 907.5.2.2
- 403.4.5 EMERGENCY RESPONDER RADIO COVERAGE IS EXISTING AND WILL BE UPGRADED TO MEET SECTION 510 OF THE FIRE CODE.
- 403.4.6 FIRE COMMAND: FIRE COMMAND CENTER WILL BE BUILT TO COMPLY WITH SECTION 911 OBC AND WILL BE SUBMITTED FOR APPROVAL BY BOTH THE FIRE DEPARTMENT AND BUILDING DEPARTMENT.
- 403.4.7 SMOKE REMOVAL : N/A
- 403.4.8 STANDBY AND EMERGENCY POWER: THE EXISTING BUILDING DOES HAVE TWO SOURCES OF POWER-SEE LETTER FROM THE UTILITY COMPANY.
- 403.5 MEANS OF EGRESS AND EVACUATION: TWO EXISTING STAIRS COMPLY WITH THE CURRENT CODE BUT THEY ARE NOT PRESSURIZED. BOTH STAIRS WILL BE PRESSURIZED TO COMPLY WITH SECTION 909 OBC.
- 403.6 ELEVATORS: THERE ARE THREE ELEVATORS IN THE EXISTING BUILDING- THE FIRE DEPARTMENT INSPECTED THE ELEVATORS AND THE EXISTING CONDITION COMPLIES WITH SECTION 403.6.1

SECTION 420:

- SEPARATION WALLS ARE PROVIDED BETWEEN THE UNITS AND OTHER USES, THERE ARE TWO HOURS SEPARATION BETWEEN THE R-2 AND B USES AND THE UNITS WILL BE SEPARATED VERTICALLY AND HORIZONTALLY E

CHAPTER 5:

- SECTION 508 : THE EXISTING BUILDING IS A MIXED USES WITH NO SEPARATION , THE PROPOSED PART OF CHANGE IN OCCUPANCY WILL BE NON-SEPARATED USES.
- 508.4 THE BUILDING IS DESIGNED BY USING THE NON-SEPARATION, NO SEPARATION ARE REQUIRED BUT THE FLOOR SYSTEM BETWEEN THE B USE AND R-2 USE IS TWO HOURS BECAUSE OF CONSTRUCTION TYPE REQ.

CHAPTER 6: THE EXISTING BUILDING IS CLASSIFIED AS 1A AND WILL CONTINUE

- TABLES 601 AND 602 –NO CHANGE, THE FIRE RESISTANCE RATINGS WILL BE MAINTAINED BASED ON TABLE 601 AND THE PROVISIONS OF SECTION 403.2

CHAPTER 7:

- ALL FIRE-RESISTANCE CONSTRUCTION IS EXISTING, THE NEW WORK WILL COMPLY WITH THE CURRENT CODE- SEE DETAILS FOR NEW RATED ASSEMBLIES.

CHAPTER 8 INTERIOR FINISH: SEE TABLE

Finishes: Table 803.11	Floors 3-6: Use B	Walls & Ceilings	Class C
		Interior Stairways & Exits	Class B
		Corridors	Class C
		Rooms & Enclosed Spaces	Class C
804.4.2		Floors	Class C
806.7		Interior Trim	Class II

Finishes: Table 803.11	Floors 7-13: Use R2	Walls & Ceilings	Class C
		Interior Stairways & Exits	Class C
		Corridors	Class C
		Rooms & Enclosed Spaces	Class C
804.4.2		Floors	Class II
806.7		Interior Trim	Class C

CHAPTER 9:

- 903 SPRINKLER SYSTEM WILL BE DESIGNED AND INSTALLED PER NFPA 13-2016-SEPARATE PERMIT
- 905 STANDPIPES ARE EXISTING
- 906 PORTABLE FIRE EXTINGUISHERS WILL BE INSTALLED PER SECTION 906 AND NFPA 10
- 907 FIRE ALARM SYSTEM WILL BE DESIGNED FOR THE R-2 USE AND INSTALLED PER NFPA 72-2016 –SEPARATE PERMIT

CHAPTER 10 MEANS OF EGRESS:

- THE BUILDING HAS TWO STAIRWAYS
- EACH UNIT WILL HAVE ONE EXIT THAT WILL LEAD TO THE TWO STAIRS-SEE LIFE SAFETY PLANS.
- OCCUPANT LOAD FOR THE R-2 USE IS BASED ON SECTION 1004 AND THE FACTOR USTED IN TABLE 1004.1.2- 200 SQ.FT/PERSON
- SECTION 1006 –TWO EXITS ARE REQUIRED FROM EACH FLOOR AND ONE EXIT IS REQUIRED FOR EACH UNIT.
- SECTION 1007 THE LOCATION OF THE TWO EXITS COMPLIES WITH THE SECTION-SEE SAFETY PLANS.
- SECTION 1008 MEANS OF EGRESS ILLUMINATION MEETS THE REQUIREMENTS SEE THE REFLECTED CEILING PLAN
- SECTION 1009 ACCESSIBLE MEANS OF EGRESS ARE NOT REQUIRED PER EXCEPTION 1009.1 EXCEPTION 1
- SECTION 1009.2.1 ELEVATORS ARE EXISTING
- SECTION 1010: MAIN DOORS ARE 3'x7' AND ALL DOORS ARE OPERABLE WITHOUT THE USE OF A KEY OR SPECIAL KNOWLEDGE
- SECTION 1011 STAIRWAYS ARE EXISTING
- SECTION 1012 RAMPS: N/A
- SECTION 1013 EXIT SIGNS: EXISTING
- SECTION 1017 TRAVEL DISTANCE 250 PER TABLE 1017.2 - 191'-0" MAXIMUM PROVIDED - SEE SAFETY PLAN
- SECTION 1020 CORRIDORS MINIMUM WIDTH IS 44 INCHES, THE CORRIDORS WILL BE RATED BY ONE HOUR PER TABLE 1020.1 AND THE DOORS WILL BE 20 MINUTES.
- THERE ARE NO DEAD END CORRIDORS
- SECTION 1022 SEE SAFETY PLANS
- SECTION 1023 INTERIOR STAIRS
- BOTH STAIRS ARE ENCLOSED BY TWO HOURS THEY WILL BE PROVIDED WITH A PRESSURIZED SYSTEM.

CHAPTER 11 ACCESSIBILITY:

- THE BUILDING IS CURRENTLY ACCESSIBLE THE NEW USE-R-2 WILL BE ACCESSIBLE PER SECTION 1107,
- TWO (2) ACCESSIBLE UNITS ARE PROVIDED. SEE GENERAL NOTE RELATED TO THE NUMBER OF ACCESSIBLE UNITS. THE TOTAL NUMBER OF ACCESSIBLE UNITS WILL BE BASED ON SECTION 1107.6.2.3 OBC

CHAPTER 13 ENERGY CALCULATIONS:

- WILL BE SUBMITTED

CHAPTER 16:

- THE LIVE LOAD FOR THE R-2 UNITS IS 40 PSF, THE EXISTING FLOOR SYSTEM IS DESIGN FOR 50 PSF.

CHAPTER 17:

- SPECIAL INSPECTION IS NOT REQUIRED

CHAPTER 29:

- BASED ON TABLE 2902 EACH UNIT WILL BE PROVIDED WITH THE REQUIRED PLUMBING FIXTURES SEE PLANS.

The Formica Building
120 E 4th Street
Cincinnati, Ohio 45202

10.23.2022

Project description:	No work Floors Basement, 1st & 2nd Floors. Floors 3, 4, 5, 6 will remain office but will be gutted of existing office. Floors 7 thru 13 will be converted into 52 apartments. Floors 7, 8, 9, 10, 11 & 12 will be converted to apartments with 8 apartments on each floors (48 total), Floors 13 will be converted to apartments with 4 apartments on this floor (4 total).
Design code:	OBC 2017(Based on IBC 2015)
Applicable regulations:	Ansi A117.1
Zoning Code:	TITLE XIV ZONING CODE OF THE CITY OF CINCINNATI
Applicable zoning district:	DD-A subdistrict
Maximum building height:	Allowable: 1050' ASL, No change → (Existing building)
Minimum yard setbacks:	No change → (Existing building)
Building occupancy classification:	Groups M, B, S, A-2. Proposed R-2
Mixed occupancy separations:	Yes
High-rise building:	Yes, 13th Floor 158' above 4th street
Type of Construction:	IA

Building height and areas	Allowable	Existing & Proposed
Building area: 508.2	UL	UL
Building height: Table 504.3	UL 503.1.3	UL
Building Stories: Table 504.4	UL	UL
Total floor area (all stories):		214,988 sf

	per floor			
Basement	35308 sf	35308	sf	Includes loading & parking
1st	31852 sf	31852	sf	
2nd	34985 sf	34985	sf	
3rd-6th (4)	10285 sf	41140	sf	10285sf x 4
7th-13th (7)	10285 sf	71995	sf	10285sf x 7
Total		214958	sf	this permit 113135

Fire suppression:	Yes
Standpipes:	Yes
Fire Alarm:	Yes

Occupant loads:		Current	Proposed	Notes
	Basement	*Existing*	*No Change*	
	Main Level	*Existing*	*No Change*	
	Second Floor	*Existing*	*No Change*	
	3-6 Floors	328	328	8175 sf per floor/100 for B = 82
	7-9 Floors	248	105	8945 sf per floor/200 for R2 = 35ppl
	10-13 Floors	328	140	8984 sf per floor/200 for R2 = 35ppl
	Total	902	573	Reduction of 329ppl

Maximum common path of travel:	B = 100' R2 = 125'
Number exits required:	2, TABLE 1006.2.1
Stair enclosure:	2hr - Exiting to Remain
Maximum exit access travel distance:	Office 300-feet, table 1017.2 Residential 250-feet, table 1017.2
Stair width:	44-inches, 1009.3, existing
Corridors fire resistance rating:	B = 0-hr TABLE 1020.1 R2 = 1/2-hr TABLE 1020.1
Minimum corridor width:	44-inches, Table 1020.2
Dead Ends:	50 Feet, 1020.4, Exception 2 - No Dead End
Exit and exit access door locations: 1007.1.1	(Separation distance, not less than 1/3 the overall diagonal of the area served)

Finishes: Table 803.11	Floors 3-6: Use B	Walls & Ceilings	Class C
		Interior Stairways & Exits	Class B
		Corridors	Class C
		Rooms & Enclosed Spaces	Class C
804.4.2		Floors	Class II
806.7		Interior Trim	

Finishes: Table 803.11	Floors 7-13: Use R2	Walls & Ceilings	Class C
		Interior Stairways & Exits	Class C
		Corridors	Class C
		Rooms & Enclosed Spaces	Class C
804.4.2		Floors	Class II
806.7		Interior Trim	Class C

modelgroup
DEVELOPMENT • CONSTRUCTION • MANAGEMENT
1826 Race Street
Cincinnati, Ohio 45202
513.559.0048

October 23, 2022

Mr. Art Dahlberg, R.A, B.O.
Director
Department of Buildings & Inspections
City of Cincinnati
Two Centennial Plaza, 805 Central Ave, Suite 500
Cincinnati, OH 45202

Dear Mr. Dahlberg,

Thank you for your time this week. We feel it was a very productive meeting.

This is a follow up with some of the items we discussed and what you requested.

Project overview: The existing 1970 Formica building contains three parts and a connection to the Mercantile Library Building (414 Walnut Street).

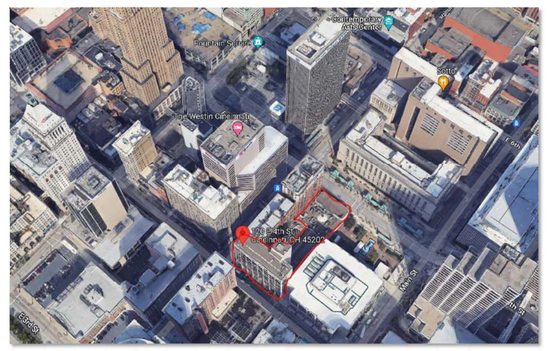

This project is concentrated on the tower portion of the current 13-story Formica Tower (blue). The main entrance is at 120 E 4th Street and contains first floor businesses accessed off of E 4th Street. The Second through Thirteenth floors contain Offices with an elevator lobby and restrooms in the bump out to the north. There are Three Elevators which will remain. This is addressed below in more detail. There are two egress stair towers at opposite ends of the building. The west stair will continue to be used by the Mercantile Library Building and addressed below.

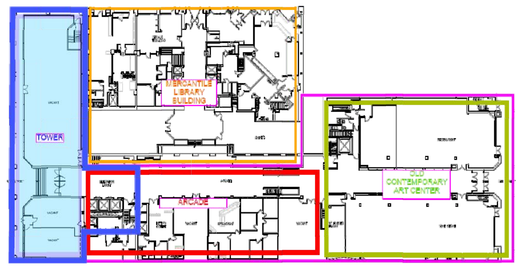

The new proposed work, per floor, is as follows:

Basement: No work besides reworking MEP as needed to separate the Mercantile Library from the Formica building

1st Floor: No work is proposed for this floor and will remain as is and in operation.

2nd Floor: No work is proposed for this floor and will remain as is and in operation.

3rd through 6th Floors: The current Offices will be removed and will remain open unfinished space. The Elevator Lobby and Restrooms will remain as is. No work in these areas.

7th through 11th Floors: The current Offices will be removed and will be converted to Eight Apartments. The Elevator Lobbies will have new finishes and the two Restrooms will have fixtures removed and will be converted into Mechanical Rooms. Total Apartment count is Forty-Eight (48).

13th Floor: The current Offices will be removed and will be converted to Four Apartments. The Elevator Lobbies will have new finishes and the two Restrooms will have fixtures removed and will be converted into Mechanical Rooms. Total Apartment count is Four (4).

Total Number of new Apartments is Fifty-Two (52).

Building Type and Use: The Office/Arcade/Museum Center building was constructed between 1968-1970 and is a Steel Frame and Concrete/Steel Pan Floor building and is 1A Construction Type. The Steel Frame has Spray-on Fireproofing. The Structure is 2-hr rated. There are Two 2-hr Egress Stairs. Original Building Use Group A2, A3, B & M. The building is equipped with an NFPA-13 Fire Suppression system with standpipes in each stair and FDC's on Walnut & E. 5th street sides. The Current Structure is in very good shape and all current Fire Ratings will be retained. Any missing Spray-on Fireproofing will be replaced to meet OBC Section 601 code requirements.

Detailed Information

Elevators: The current size of the Three elevator is approximately 5'-9"W x 4'-5"D x 8'-7"H. We met with the Captain Hart with the Cincinnati Fire Department and EMS at 120 E 4th Street on Wednesday 04.06.2022 to review the Elevator Sizes. The EMS crew was able to fit their gurney into the elevator. Capt. Hart requested we rework the interior cab rails which we will do.

Fire Command Center: Currently there isn't a Fire Command Center. A Fire Command Center will be provided that complies with Section 911 Fire Command Center requirements.

Fire Panel: A new Addressable Fire Panel will be installed in the Command Center. The Panel will communicate with the Fire Panel in the Mercantile Library building and vice versa the Mercantile Library Building's fire panel will communicate with The Formica Building.

Fire Shutters: Currently, there are fire shutters that deploy, where the buildings are internally connected, if an alarm is sounded in either the Formica Complex or the Mercantile Library Building. These Fire Shutters will remain.

Fire Department Connection and Standpipes: There are two FDC locations for the complex. These are located on the corner of Walnut and E 4th Street Egress Door, West side of the building at E 5th Street at the egress door.

Fire Pump: The current fire pump will be replaced with a new fire pump.

Stairs: The Two Egress Stairs are currently not pressurized. The new work will Pressurize both Egress stairs to comply with OBC Section 909. The West Stair (Stair #2) is currently shared with the Mercantile Library Building for its means of egress. An easement is being obtained and recorded to retain and continue to share the egress stair #2.

Emergency Responder Radio Coverage: The building currently has a DAS and will be tested for compliance. If the system is inadequate, the system will be replaced.

Emergency Power: There are two sources of power from the utility company.

Construction Period: During construction, ALL Life Safety Items will remain functional and in place. This will include Sprinklers, Smoke Detectors, Fire Alarms, Fire Panels, Fire Shutters, Fire Dampers, FDC, Etc. The Exist Egress pathways and stairs will remain clear and operational at all times.

Sincerely,

Joe Bockin, RA
Director of Design
The Model Group, Inc.

cc: Majed Dabdoub, P.E.

STATE OF OHIO JOSEPH A. BODKIN 3135567 REGISTERED ARCHITECT
Joseph A. Bodkin, License #3135567
Expiration Date: 12.31.2023

modelgroup
DEVELOPMENT • CONSTRUCTION • MANAGEMENT
1826 Race Street
Cincinnati, Ohio 45202
513.559.0048

Formica Building

Office/Apartments
Auditor Address: 115 E. 5th Street, Actual Address: 120 E. 4th Street
Cincinnati OH 45202

No.	Revisions	Date
1	PLAN REVIEW COMMENTS	07.05.2022
2	ENG OH #1	11.14.2022

Project: Formica Building
115 E 5th Street
Cincinnati, Ohio 45202
Sheet Title: LIFE SAFETY PLANS
Project No: 2022_259
Issue Date
Scale: As Noted
Drawn
Checked

LS-100

APPROVED
CIN BD
2022P03573
02/01/23
city of CINCINNATI BUILDINGS & INSPECTIONS

C:\Users\jbodkin\Dropbox\01_MBG_Projects\01_CADs - Phase C - From Ten1\006_Formica_LS-100-102.dwg-LS-100, Plot Date/Time: Nov 14, 2022-3:19pm By: jbodkin

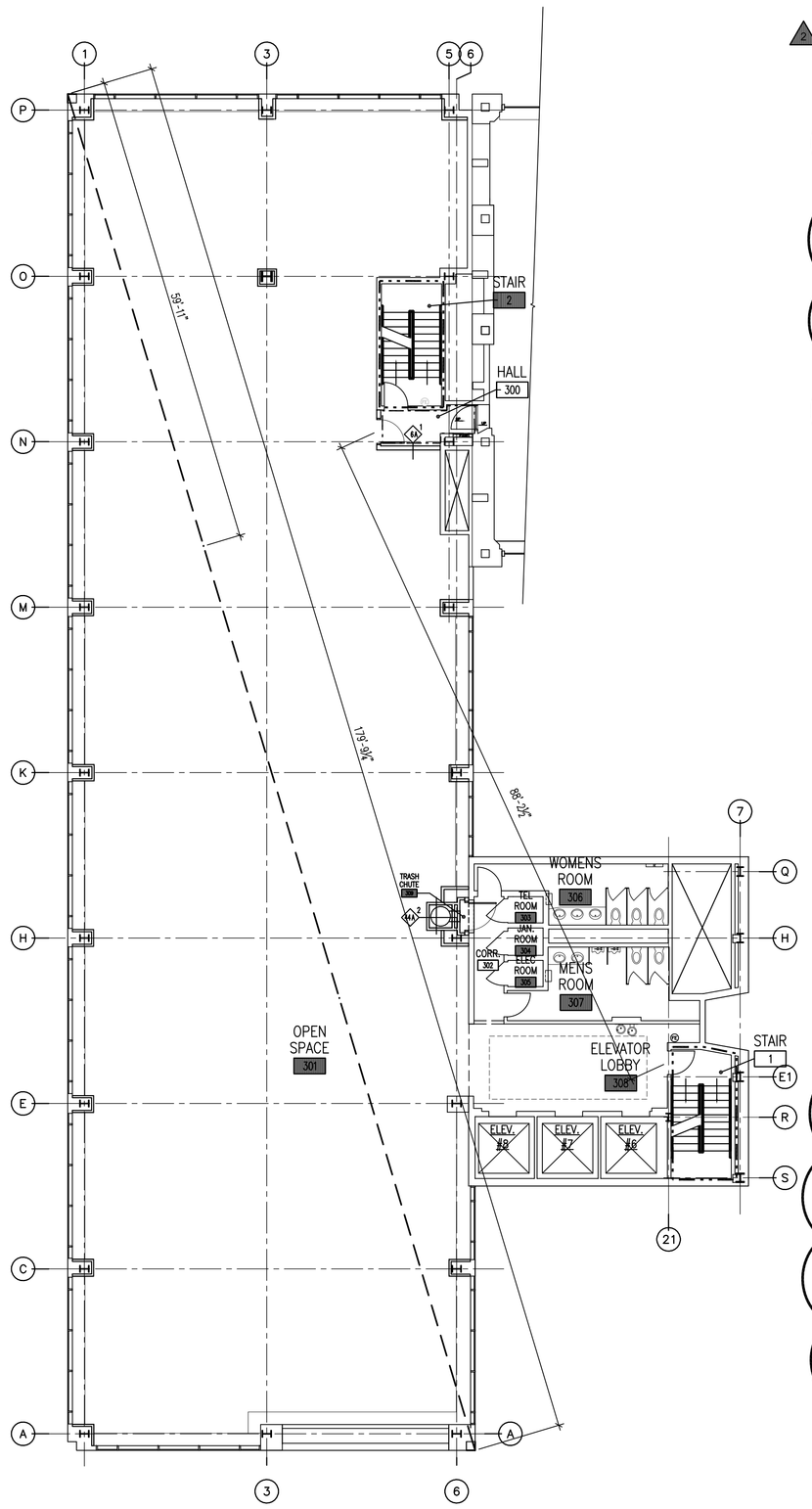

LIFE/SAFETY
TYPICAL RESIDENTIAL FLOOR PLAN - FLOORS 3, 4, 5, & 6
SCALE: 3/32" = 1'-0"
1 LS-103

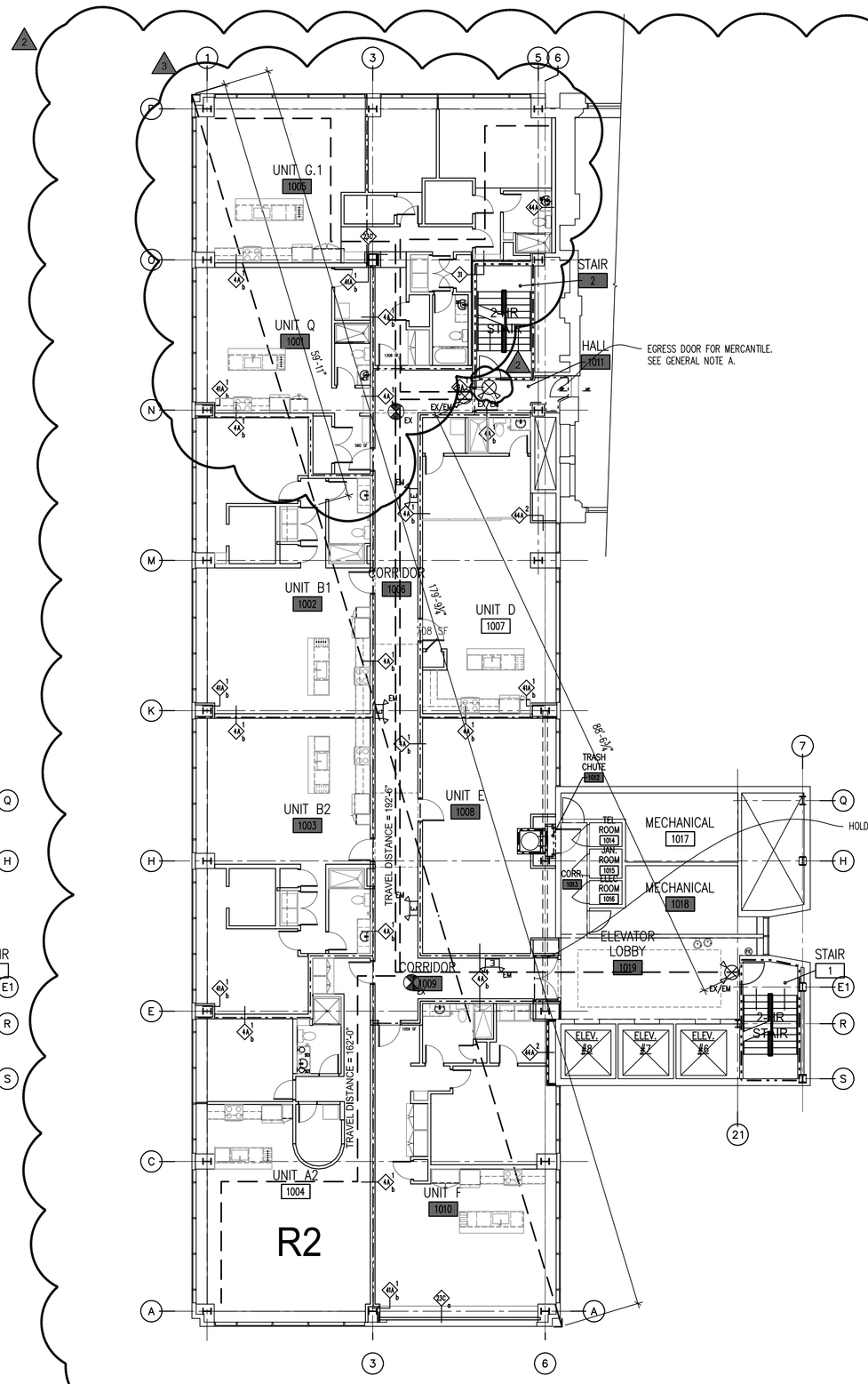

LIFE/SAFETY
TYPICAL RESIDENTIAL FLOOR PLAN - FLOORS 7, 8, 9, & 10
SCALE: 3/32" = 1'-0"
1 LS-103

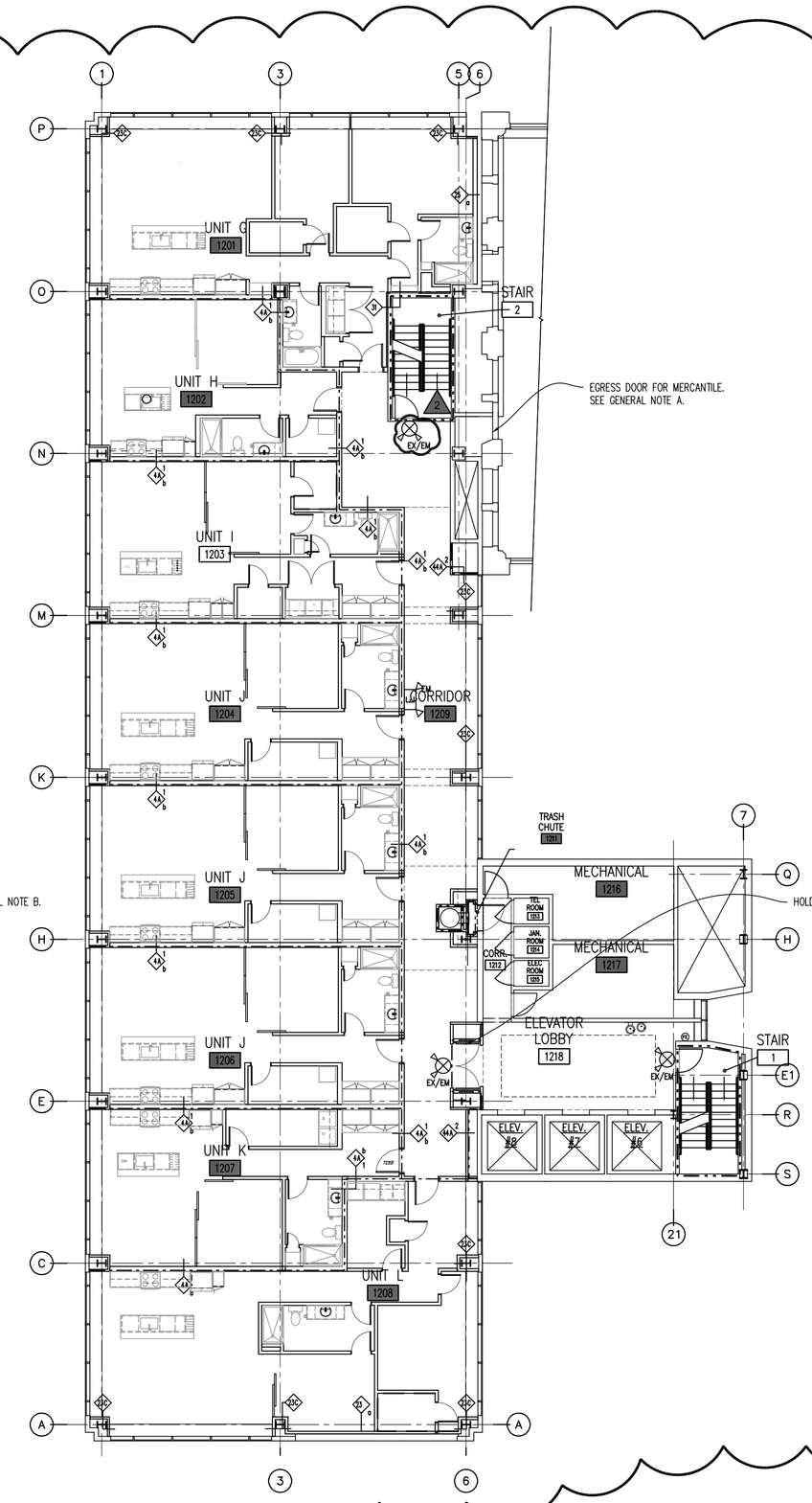

LIFE/SAFETY
TYPICAL RESIDENTIAL FLOOR PLAN - FLOORS 11 & 12
SCALE: 3/32" = 1'-0"
2 LS-103

FIRE RATING LEGEND

1-HR RATED ASSEMBLY

2-HR RATED ASSEMBLY

GENERAL LIFE-SAFETY NOTES:

A. FIRE STAIR #1 WILL BE USED BY THE MERCANTILE LIBRARY BUILDING AS A MEANS OF EGRESS. AN EASEMENT FOR THE USE OF THIS STAIR WILL BE FILE UNDER THE PERMIT FOR THE MERCANTILE LIBRARY BUILDING. THERE IS NOT ACCESS FROM THE FORMICA BUILDING TO THE MERCANTILE LIBRARY BUILDING EXCEPT ON FLOOR 2 FOR THE USE OF THE EXISTING TOILETS. THIS DOOR IS TO HAVE SIGNAGE ON THE DOORS THE STATES "NOT AN EXIT".

B. ALL MAGNETIC HOLD OPENS ARE TO BE CONNECTED AND CONTROLLED BY THE SMOKE AND FIRE ALARM SYSTEM.

STATE OF OHIO
JOSEPH A. BODKIN
3153567
REGISTERED ARCHITECT
Joseph A. Bodkin, License #3153567
Expiration Date: 12.31.2023

modelgroup
DEVELOPMENT • CONSTRUCTION • MANAGEMENT
1826 Race Street
Cincinnati, Ohio 45202
513.559.0048

Formica Building

Office/Apartments

Auditor Address: 115 E. 5th Street, Actual Address: 120 E. 4th Street
Cincinnati OH 45202

Project
Formica Building
115 E 5th Street
Cincinnati, Ohio 45202

No.	Revisions	Date
	PLAN REVIEW COMMENTS	07.05.2022
	ENG CHANGE #1	11.14.2022
	APARTMENT CHANGES	12.05.2022

Sheet File
LIFE SAFETY PLANS
Issue Date
Project No: 2022_259
Drawn
Checked
Scale: As Noted

LS-103

APPROVED
CIN BD
2022P03573
02/01/23
city of CINCINNATI
BUILDINGS & INSPECTIONS
C:\Users\jbodkin\Dropbox\001_NUVO_Projects\002_Formica\1st\1_PHASE C\CADs - Phase C - From 1st\LOSE_Formica_LS-103_Plans.dwg-LS-103, Plot Date/Time: Dec 12, 2022-6:18am - By: jbodkin

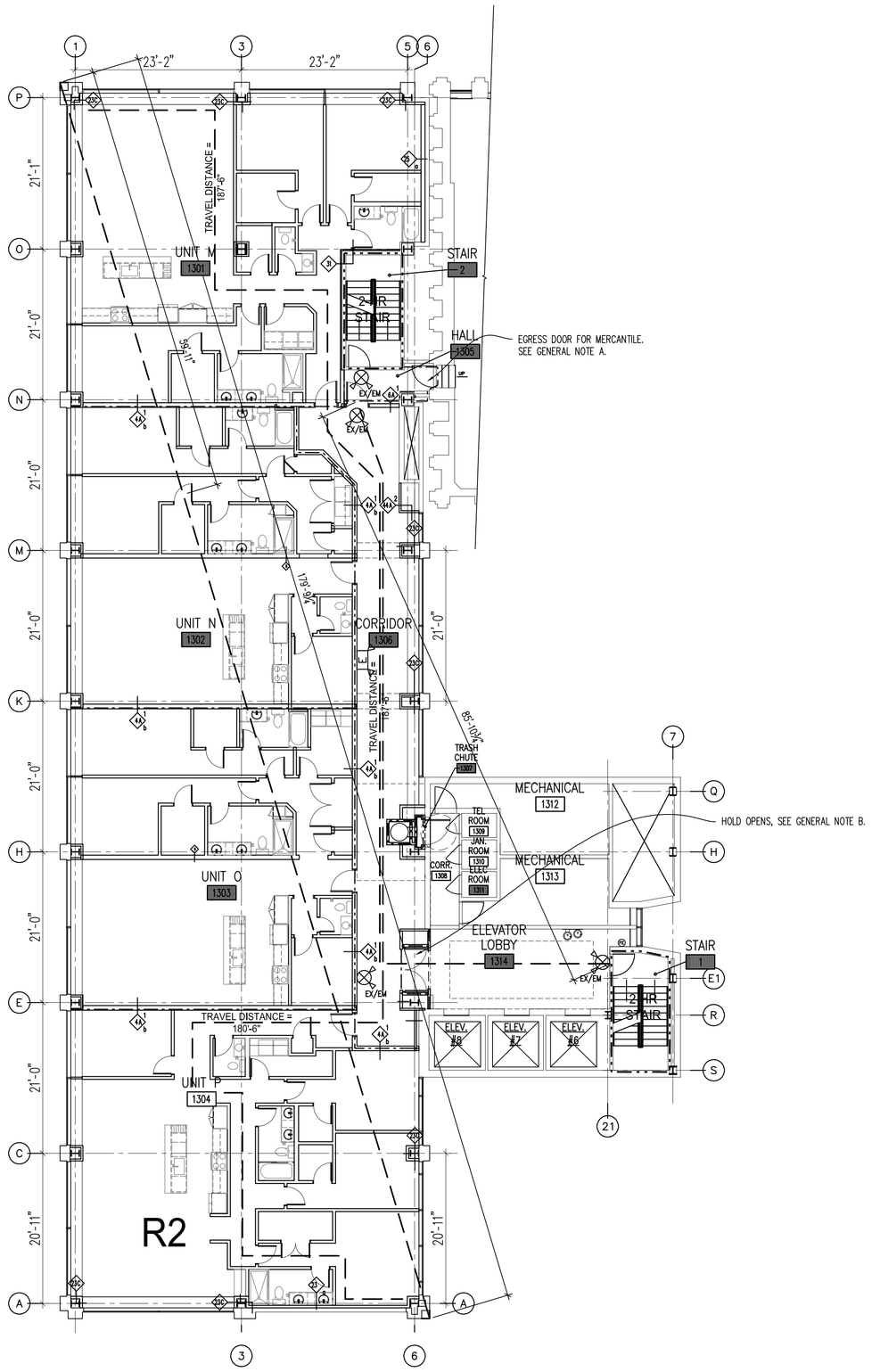

LIFE/SAFETY
TYPICAL RESIDENTIAL FLOOR PLAN - FLOOR 13
SCALE: 3/32" = 1'-0"
1 LS-104

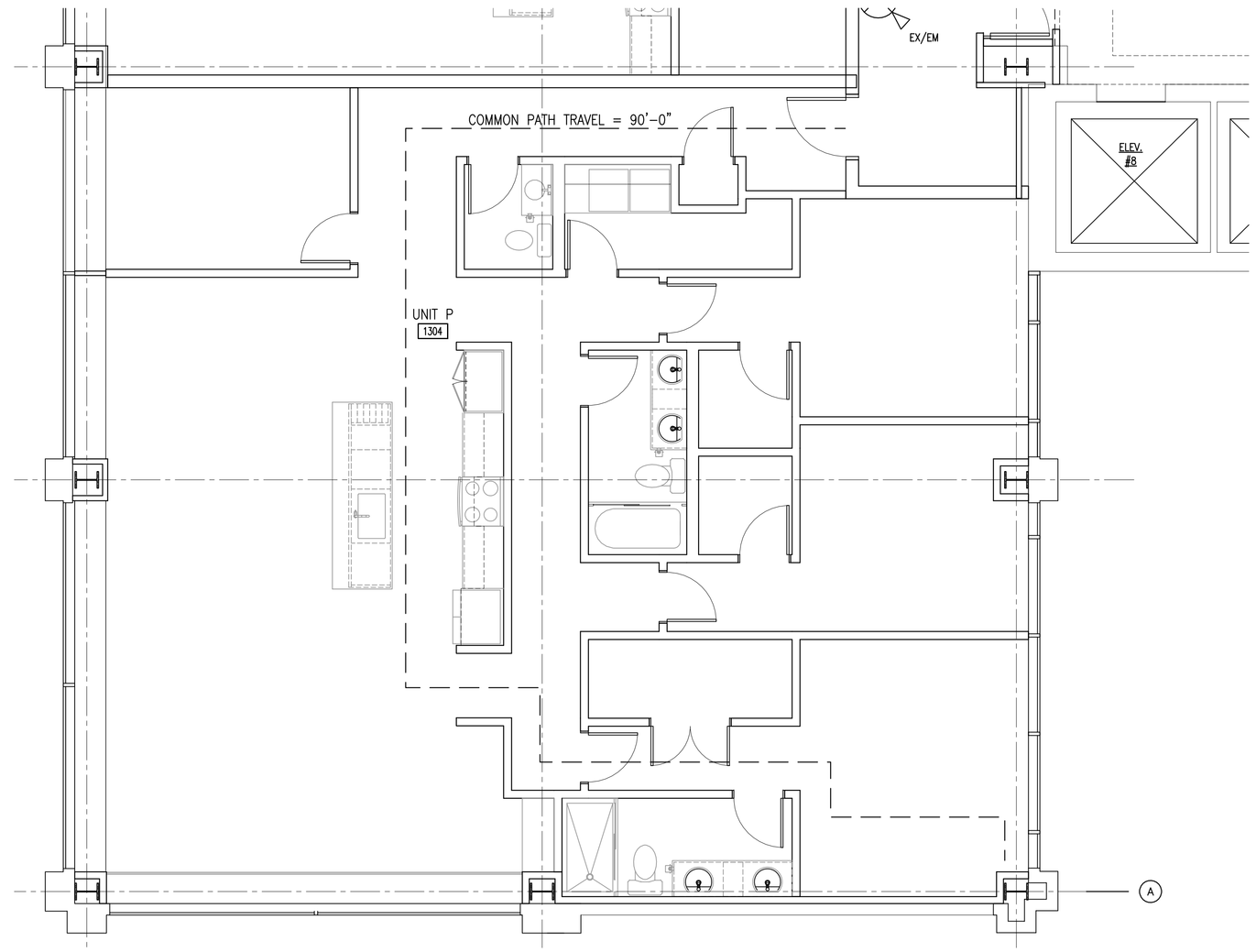

LIFE/SAFETY
LONGEST TRAVEL DISTANCE
SCALE: 1/4" = 1'-0"
2 LS-104

FIRE RATING LEGEND

1-HR RATED ASSEMBLY
2-HR RATED ASSEMBLY

GENERAL LIFE-SAFETY NOTES:

A. FIRE STAIR #1 WILL BE USED BY THE MERCANTILE LIBRARY BUILDING AS A MEANS OF EGRESS. AN EASEMENT FOR THE USE OF THIS STAIR WILL BE FILE UNDER THE PERMIT FOR THE MERCANTILE LIBRARY BUILDING. THERE IS NOT ACCESS FROM THE FORMICA BUILDING TO THE MERCANTILE LIBRARY BUILDING EXCEPT ON FLOOR 2 FOR THE USE OF THE EXISTING TOILETS. THIS DOOR IS TO HAVE SIGNAGE ON THE DOORS THE STATES "NOT AN EXIT".

B. ALL MAGNETIC HOLD OPENS ARE TO BE CONNECTED AND CONTROLLED BY THE SMOKE AND FIRE ALARM SYSTEM.

STATE OF OHIO
JOSEPH A. BODKIN
3153567
REGISTERED ARCHITECT
Joseph A. Bodkin, License #3153567
Expiration Date: 12.31.2023

model group
DEVELOPMENT • CONSTRUCTION • MANAGEMENT
1826 Race Street
Cincinnati, Ohio 45202
513.559.0048

Formica Building

Office/Apartments

Auditor Address: 115 E. 5th Street, Actual Address: 120 E. 4th Street
Cincinnati OH 45202

No.	Revisions	Date
	PLAN REVIEW COMMENTS	07.05.2022
1	ENG CHG #1	11.14.2022

Project: Formica Building
115 E 5th Street
Cincinnati, Ohio 45202
Sheet Title: LIFE SAFETY PLANS
Project No: 2022_259
Issue Date
Scale: AS Noted
Drawn
Checked

LS-104

APPROVED
CIN BD
2022P03573
02/01/23
city of CINCINNATI
BUILDINGS & INSPECTIONS

C:\Users\jbodkin\Dropbox\01_NOD_Projects\01_PHASE C\CADs - Phase C - From Terr1\01E_Formica_LS-104_Plans.dwg=LS-104, Plot Date/Time: Nov 14, 2022-3:24pm - By: jbodkin

city of CINCINNATI BUILDINGS & INSPECTIONS
APPROVED
CIN BD
2022P03573
02/01/23

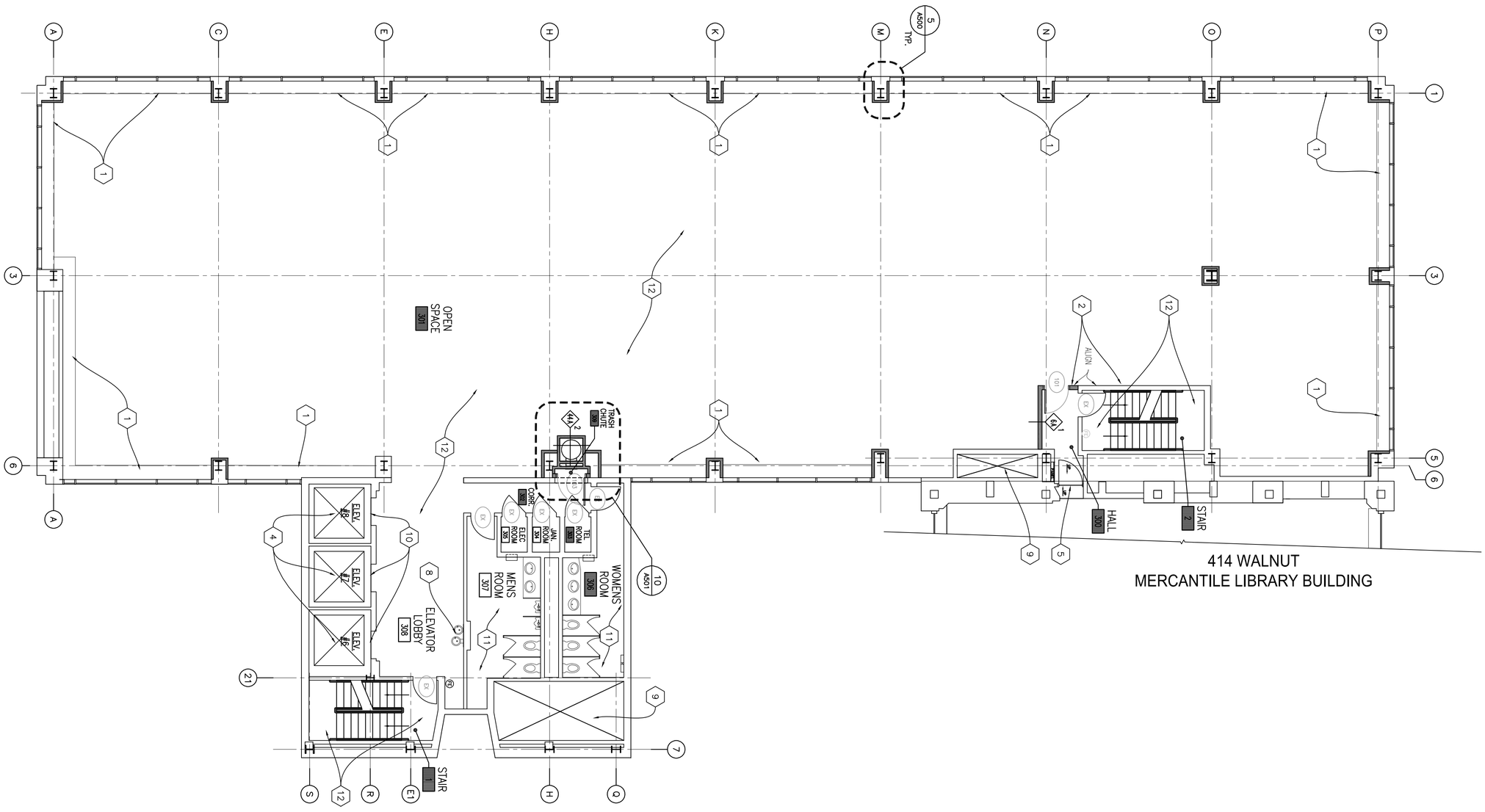

CONSTRUCTION
TYPICAL OFFICE FLOOR PLAN - FLOORS 3RD - 6TH
SCALE: 1/8" = 1'-0"
1 A203

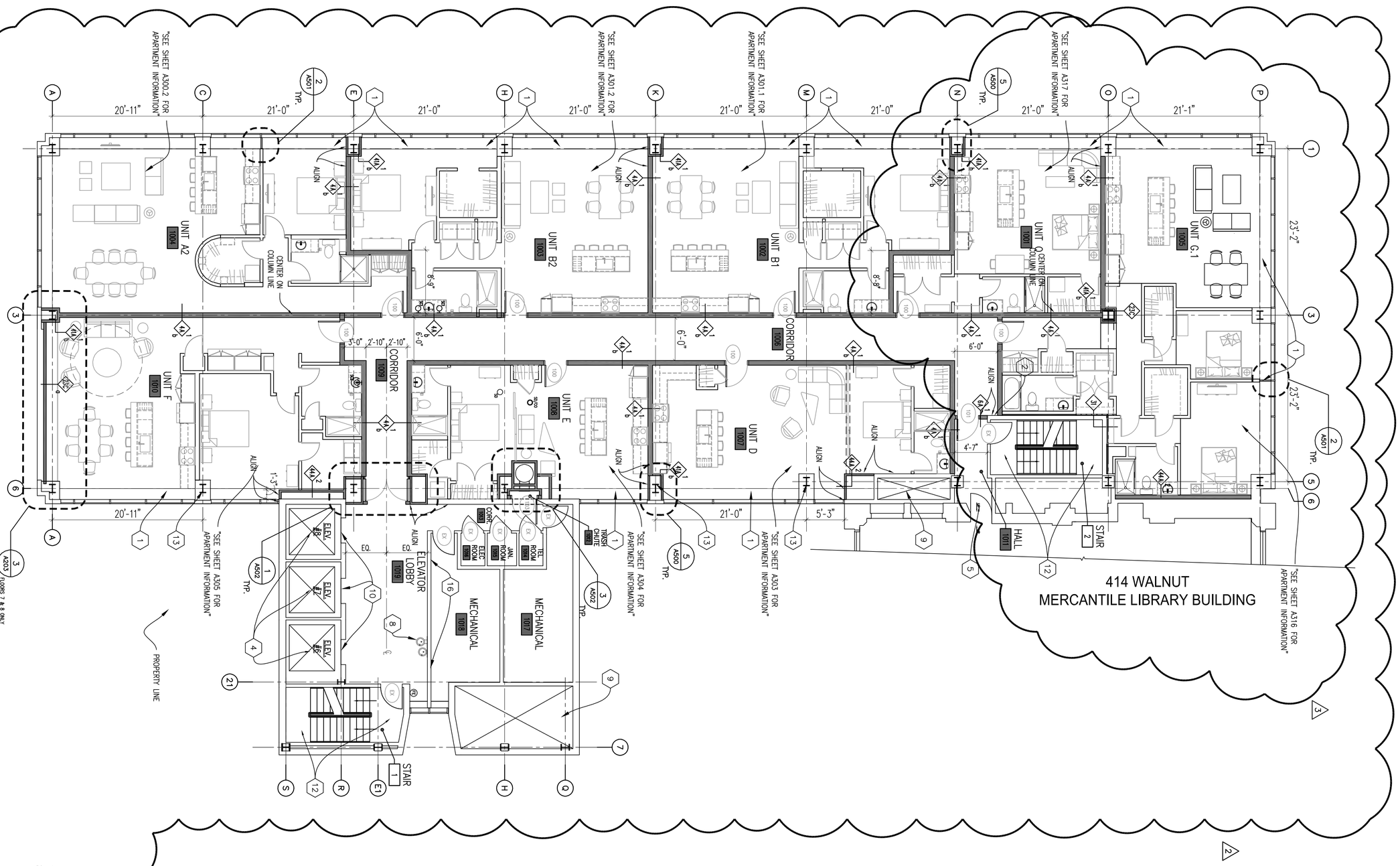

CONSTRUCTION
TYPICAL RESIDENTIAL FLOOR PLAN - FLOORS 7th to 10th
SCALE: 1/8" = 1'-0"
2 A203

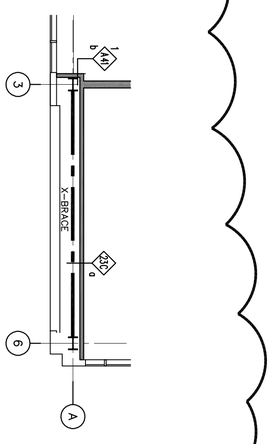

DIAGONAL BRACING
TYPICAL FLOOR PLAN - FLOORS 7 & 8
SCALE: 1/8" = 1'-0"
3 A203

GENERAL CONSTRUCTION NOTES:

A. ALL WALLS ARE TYPE 3 U.N.O.
B. SEE ENLARGED APARTMENT PLANS ON A300 SERIES SHEETS.
C. ALL EXSTG METAL STAIR GUARDRAILS AND HANDRAILS, METAL DOOR FRAMES ON FLOORS 3-13 ARE TO BE REPAIRED, CLEANED, SCRAPED, PRIMED & PAINTED. INSTALL ALL NEW HARDWARE EXCEPT HINGES.
D. ALL PAINTED SURFACES ARE TO BE CLEANED, PATCHED, PREPPED, PRIMED & PAINTED. TYP OF ALL.
E. ALL PAINTED METAL RAILS ARE TO BE REPAIRED CLEANED, PREPPED, PRIMED & PAINTED. U.N.O.
F. ALL FF&E BY OWNER.
G. REWORK SPRINKLERS AS REQUIRED FOR NEW WALLS & CEILINGS. SPRINKLER CONTRACTOR TO SUBMIT PERMITS FOR THEIR WORK.
H. ALL EXPOSED CONCRETE FLOORS ARE TO BE CLEANED OF ALL ...
I. ALL EXISTING EGRESS STAIRS ARE TO REMAIN FREE AND CLEAR.
J. REPAIR ANY DAMAGE DONE TO THE WALLS THAT AFFECT IT'S RATING. ALL SPRAY-ON FIREPROOFING IS TO REMAIN. ANY DAMAGED FIREPROOFING IS TO BE REPAIRED/REPLACED TO AN EQUIVALENT FIRE RATING.
K. ALL WINDOWS AND FRAMES ARE TO REMAIN. PROTECT DURING CONSTRUCTION.
L. ALL COLUMN DIMENSIONS ARE FOR REFERENCE ONLY. THEY HAVE NOT BEEN FIELD VERIFIED.
M. ALL APARTMENT KITCHEN HOODS ARE RECIRCULATING.
N. ALL DRYERS ARE ELECTRIC AND VENTLESS.

CONSTRUCTION PLAN NOTES:

1. ALL EXISTING METAL HVAC CABINETS TO REMAIN. PROTECT DURING CONSTRUCTION. ALL ARE TO BE PREPPED, PRIMED & REPAINTED. USE APPROPRIATE PAINT FOR METAL
2. NEW WALL FINISH TO MATCH ADJACENT FINISHES. U.N.O.
3. NEW RATED RECESSED FIRE EXTINGUISHER CABINET. TYP OF ALL U.N.O.
4. PROVIDE & INSTALL NEW ELEVATOR FINISHES.
5. EXISTING RATED DOOR TO ADJACENT BUILDING TO REMAIN. THIS DOOR IS TO REMAIN CLEAR AT ALL TIMES.
6. NEW MEMBRANE ROOF. PROVIDE NEW ROOF
7. MECHANICAL DRAINS, FOUNTAINS TO REMAIN WHERE THEY EXIST.
8. PROTECT DURING CONSTRUCTION.
9. SHAFT SPACE TO REMAIN.
10. PROTECT ELEVATOR CABS, FINISHES & DOORS DURING CONSTRUCTION
11. ALL BATHROOM FINISHES ARE TO REMAIN. PROTECT DURING CONSTRUCTION.
12. EXPOSED CONCRETE FLOOR. TYPICAL OF ALL U.N.O.
13. GYP. BD. WRAP. SEE DETAIL
14. REMOVE AND REPLACE ROOF DRAIN COVERS
15. STONE COPING TO BE INSPECTED AND REPAIRED AS REQ'D TO PROVIDE SECURE COPING. TYP OF ALL
16. NEW NON-RATED GYP. BD. WALLS TO MATCH ADJACENT FINISH.
17. REINSTALL SALVAGE DOOR.
18. VENT TO REMAIN.
19. EXISTING ROOF HATCH TO REMAIN.
20. REMOVED EXSTG HVAC CABINET THIS LOCATION ONLY.

A203

Project
Formica Building
115 E 5th Street
Cincinnati, Ohio 45202

No.	Revisions	Date
2	ENG CHG #1	11.14.2022
3	CHANGED APARTMENTS	12.05.2022

Sheet Title
TYPICAL OFFICE & RESIDENTIAL FLOORS PLAN
CONSTRUCTION PLAN

Project No. 2022_259 Issue Date
Scale As Noted Drawn Checked

Formica Building

Office/Apartments

Auditor Address: 115 E. 5th Street, Actual Address: 120 E. 4th Street
Cincinnati OH 45202

modelgroup
DEVELOPMENT • CONSTRUCTION • MANAGEMENT
1826 Race Street
Cincinnati, Ohio 45202
513.559.0048

STATE OF OHIO
JOSEPH A. BODKIN
313367
REGISTERED ARCHITECT
Joseph A. Bodkin, License #313367
Expiration Date: 12.31.2023

city of CINCINNATI BUILDINGS & INSPECTIONS
APPROVED
CIN BD
2022P03573
02/01/23

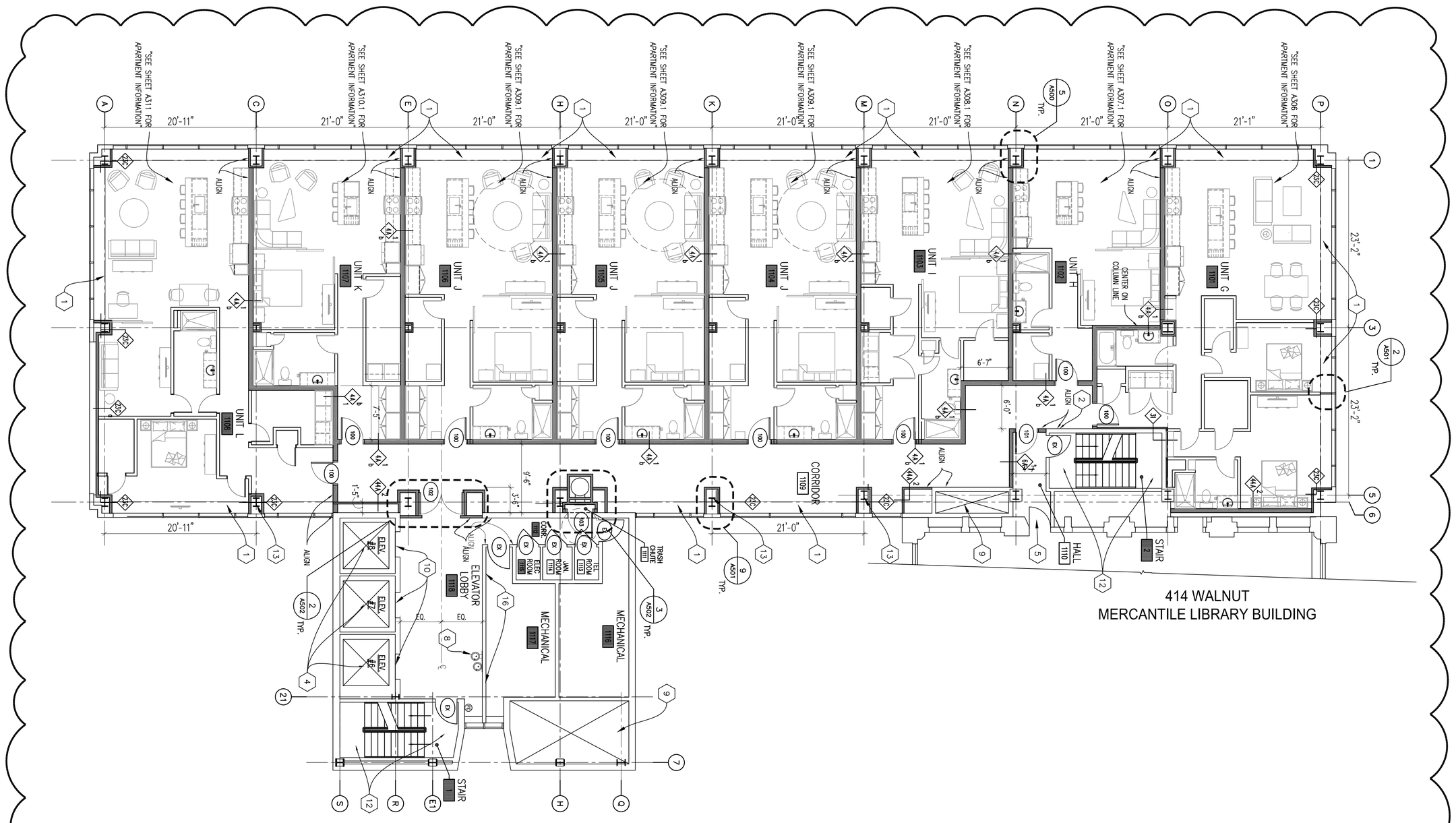

CONSTRUCTION
TYPICAL RESIDENTIAL FLOOR PLAN - FLOOR 11th
SCALE: 1/8" = 1'-0"

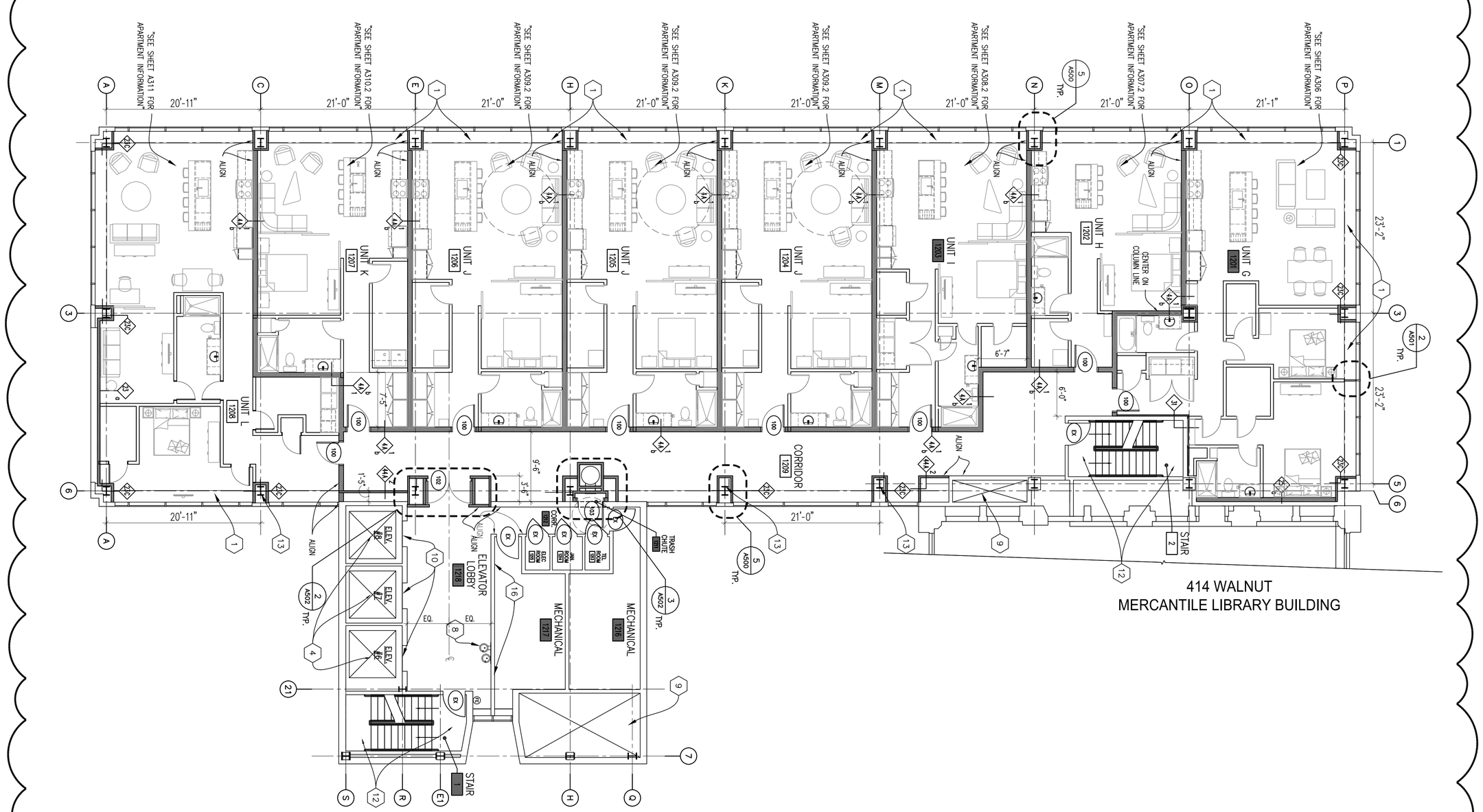

CONSTRUCTION
RESIDENTIAL FLOOR PLAN - FLOOR 12th
SCALE: 1/8" = 1'-0"

GENERAL CONSTRUCTION NOTES:

A. ALL WALLS ARE TYPE 3 U.N.O.
B. SEE ENLARGED APARTMENT PLANS ON A300 SERIES SHEETS.
C. ALL EXST'G METAL STAIR GUARDRAILS AND HANDRAILS, METAL DOOR FRAMES ON FLOORS 1-13, ARE TO BE REPAIRED, CLEANED, SCRAPED, PRIMED & PAINTED. INSTALL ALL NEW HARDWARE EXCEPT HINGES.
D. ALL PAINTED SURFACES ARE TO BE CLEANED, PATCHED, PREPPED, PRIMED & PAINTED. TYP OF ALL.
E. ALL PAINTED METAL RAILS ARE TO BE REPAIRED CLEANED, PREPPED, PRIMED & PAINTED. U.N.O.
F. ALL FF&E BY OWNER.
G. REWORK SPRINKLERS AS REQUIRED FOR NEW WALLS & CEILINGS. SPRINKLER CONTRACTOR TO SUBMIT PERMITS FOR THEIR WORK.
H. ALL EXPOSED CONCRETE FLOORS ARE TO BE CLEANED OF ALL ...
I. ALL EXISTING EGRESS STAIRS ARE TO REMAIN FREE AND CLEAR. REPAIR ANY DAMAGE DONE TO THE WALLS THAT AFFECT IT'S RATING.
J. ALL SPRAY-ON FIREPROOFING IS TO REMAIN. ANY DAMAGED FIREPROOFING IS TO BE REPAIRED/REPLACED TO AN EQUIVALENT FIRE RATING.
K. ALL WINDOWS AND FRAMES ARE TO REMAIN. PROTECT DURING CONSTRUCTION.
L. ALL COLUMN DIMENSIONS ARE FOR REFERENCE ONLY. THEY HAVE NOT BEEN FIELD VERIFIED.

CONSTRUCTION PLAN NOTES:

1. ALL EXISTING METAL HVAC CABINETS TO REMAIN. PROTECT DURING CONSTRUCTION. ALL ARE TO BE PREPPED, PRIMED & REPAINTED. USE APPROPRIATE PAINT FOR METAL
2. NEW WALL FINISH TO MATCH ADJACENT FINISHES. U.N.O.
3. NEW RATED RECESSED FIRE EXTINGUISHER CABINET. TYP OF ALL U.N.O.
4. PROVIDE & INSTALL NEW ELEVATOR FINISHES.
5. EXISTING RATED DOOR TO ADJACENT BUILDING TO REMAIN. THIS DOOR IS TO REMAIN CLEAR AT ALL TIMES.
6. NEW MEMBRANE ROOF. PROVIDE NEW ROOF
7. MECHANICAL ROOM ROOF. PROVIDE NEW ROOF
8. EXISTING DRINKING FOUNTAINS TO REMAIN WHERE THEY EXIST. PROTECT DURING CONSTRUCTION.
9. SHAFT SPACE TO REMAIN.
10. PROTECT ELEVATOR CABS, FINISHES & DOORS DURING CONSTRUCTION
11. ALL BATHROOM FINISHES ARE TO REMAIN. PROTECT DURING CONSTRUCTION.
12. EXPOSED CONCRETE FLOOR. TYPICAL OF ALL U.N.O.
13. GYP. BD. WRAP. SEE DETAIL
14. REMOVE AND REPLACE ROOF DRAIN COVERS
15. STONE COPING TO BE INSPECTED AND REPAIRED AS REQ'D TO PROVIDE SECURE COPING. TYP OF ALL
16. NEW NON-RATED GYP. BD. WALLS TO MATCH ADJACENT FINISH.
17. REINSTALL SALVAGE DOOR.
18. VENT TO REMAIN.
19. EXISTING ROOF HATCH TO REMAIN.
20. REMOVED EXST'G HVAC CABINET THIS LOCATION ONLY.

A204

Project
Formica Building
115 E 5th Street
Cincinnati, Ohio 45202

No.	Revisions	Date
2	ENG CHG #1	11.14.2022

Sheet Title
TYPICAL RESIDENTIAL FLOOR CONSTRUCTION PLAN

Project No. 2022_259 Issue Date
Scale As Noted Drawn Checked

Formica Building

Office/Apartments

Auditor Address: 115 E. 5th Street, Actual Address: 120 E. 4th Street
Cincinnati OH 45202

modelgroup
DEVELOPMENT • CONSTRUCTION • MANAGEMENT
1826 Race Street
Cincinnati, Ohio 45202
513.559.0048

STATE OF OHIO
JOSEPH A. BODKIN
313367
REGISTERED ARCHITECT
Joseph A. Bodkin, License #313367
Expiration Date: 12.31.2023

city of CINCINNATI BUILDINGS & INSPECTIONS
APPROVED
CIN BD
2022P03573
02/01/23

CONSTRUCTION
RESIDENTIAL FLOOR PLAN - FLOOR 13th
SCALE: 1/8" = 1'-0"

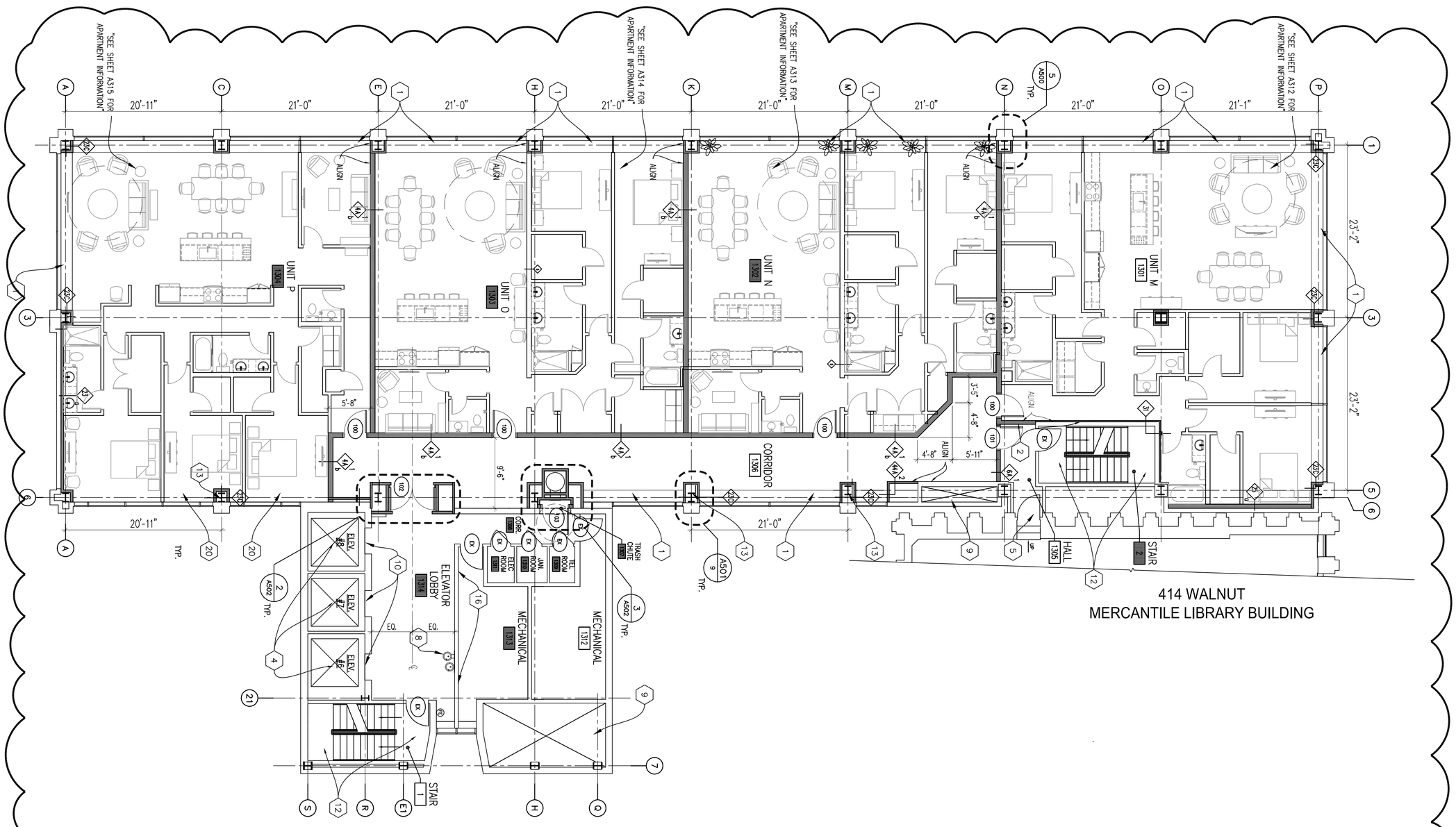

FLOORS 13
APARTMENT EXHAUST DIAGRAM
SCALE: 1/8" = 1'-0"

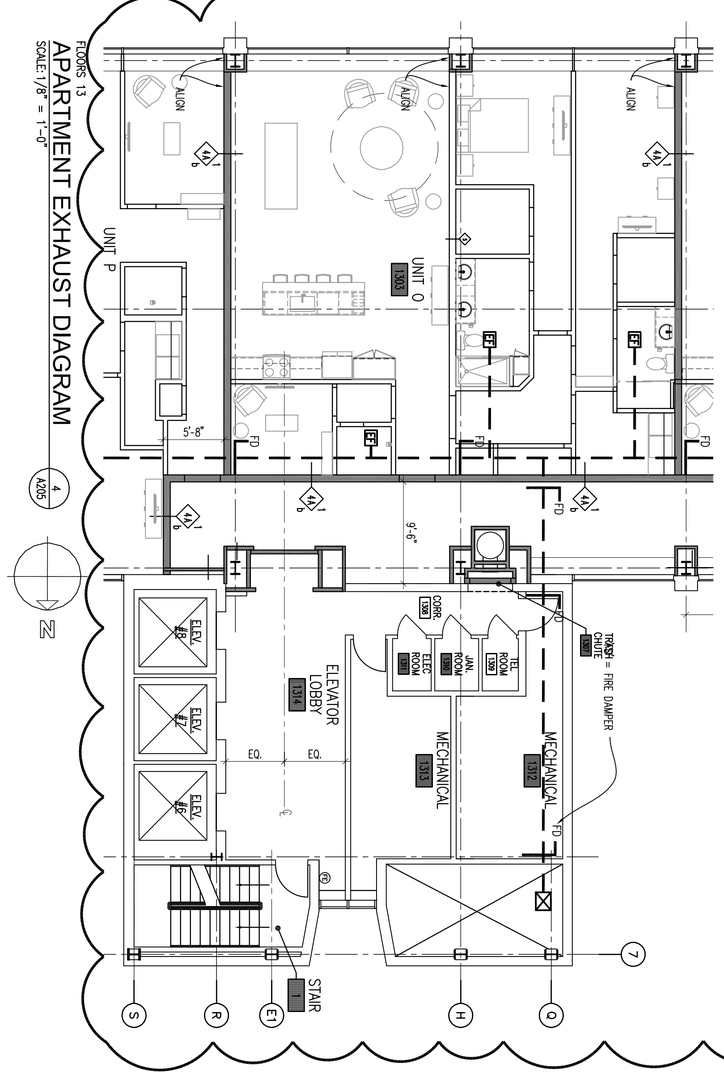

FLOORS 11 & 12
APARTMENT EXHAUST DIAGRAM
SCALE: 1/8" = 1'-0"

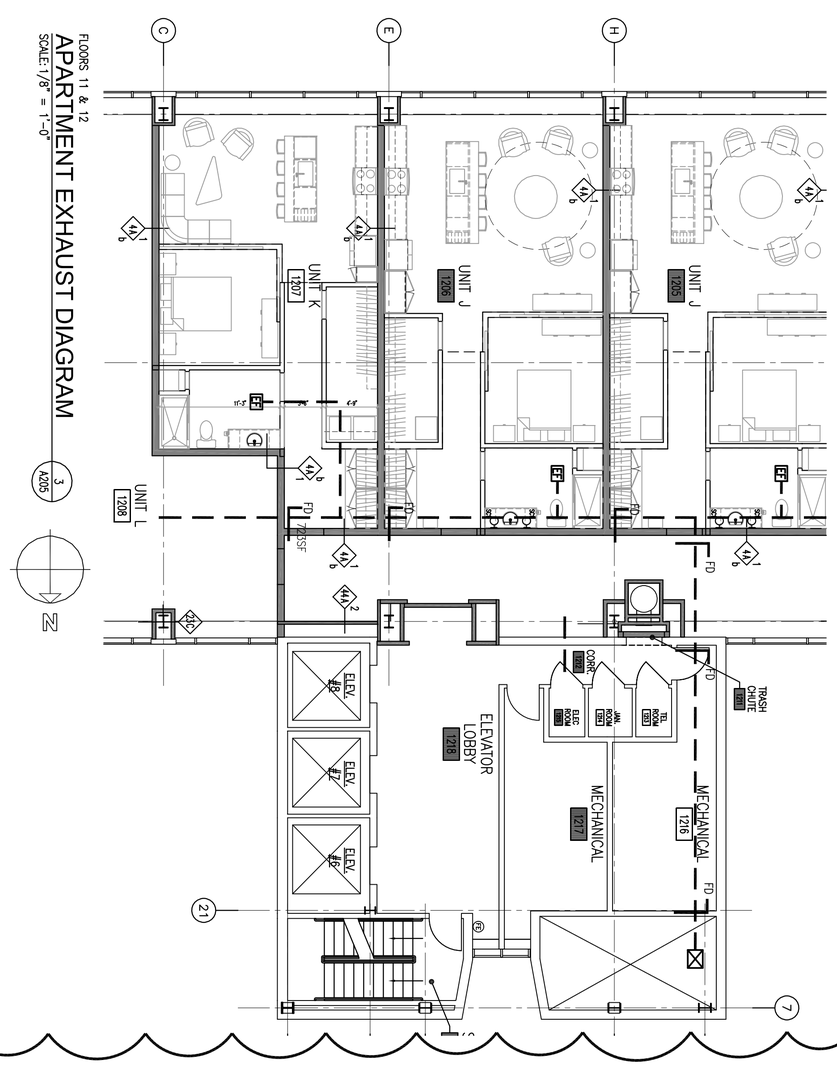

FLOORS 7 THRU 10
APARTMENT EXHAUST DIAGRAM
SCALE: 1/8" = 1'-0"

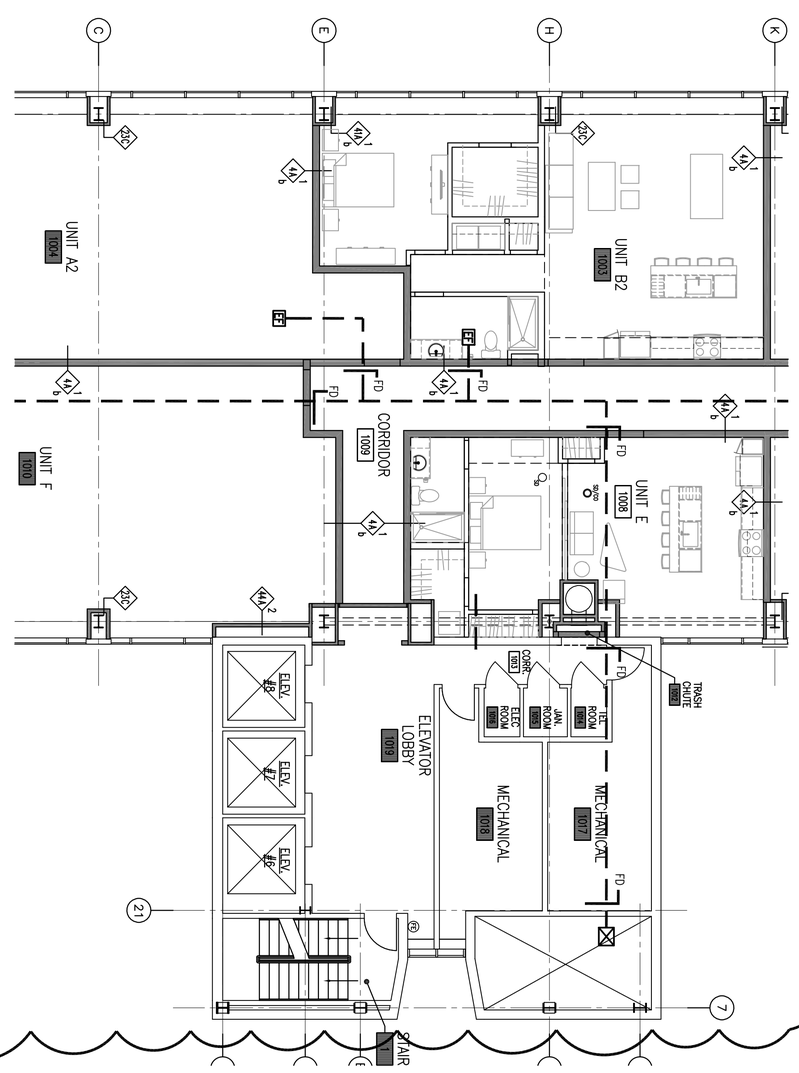

GENERAL CONSTRUCTION NOTES:

A. ALL WALLS ARE TYPE 3 U.N.O.
B. SEE ENLARGED APARTMENT PLANS ON A300 SERIES SHEETS.
C. ALL EXST'G METAL STAIR GUARDRAILS AND HANDRAILS, METAL DOOR FRAMES ON FLOORS 3-13 ARE TO BE REPAIRED, CLEANED, SCRAPED, PRIMED & PAINTED. INSTALL ALL NEW HARDWARE EXCEPT HINGES.
D. ALL PAINTED SURFACES ARE TO BE CLEANED, PATCHED, PREPPED, PRIMED & PAINTED: TYP OF ALL.
E. ALL PAINTED METAL RAILS ARE TO BE REPAIRED CLEANED, PREPPED, PRIMED & PAINTED, U.N.O.
F. ALL FF&E BY OWNER.
G. REWORK SPRINKLERS AS REQUIRED FOR NEW WALLS & CEILINGS. SPRINKLER CONTRACTOR TO SUBMIT PERMITS FOR THEIR WORK.
H. ALL EXPOSED CONCRETE FLOORS ARE TO BE CLEANED OF ALL ...
I. ALL EXISTING EGRESS STAIRS ARE TO REMAIN FREE AND CLEAR.
J. REPAIR ANY DAMAGE DONE TO THE WALLS THAT AFFECT IT'S RATING. ALL SPRAY-ON FIREPROOFING IS TO REMAIN. ANY DAMAGED FIREPROOFING IS TO BE REPAIRED/REPLACED TO AN EQUIVALENT FIRE RATING.
K. ALL WINDOWS AND FRAMES ARE TO REMAIN. PROTECT DURING CONSTRUCTION.
L. ALL COLUMN DIMENSIONS ARE FOR REFERENCE ONLY. THEY HAVE NOT BEEN FIELD VERIFIED.

CONSTRUCTION PLAN NOTES:

1. ALL EXISTING METAL HVAC CABINETS TO REMAIN. PROTECT DURING CONSTRUCTION. ALL ARE TO BE PREPPED, PRIMED & REPAINTED. USE APPROPRIATE PAINT FOR METAL
2. NEW WALL FINISH TO MATCH ADJACENT FINISHES, U.N.O.
3. NEW RATED RECESSED FIRE EXTINGUISHER CABINET. TYP OF ALL U.N.O.
4. PROVIDE & INSTALL NEW ELEVATOR FINISHES.
5. EXISTING RATED DOOR TO ADJACENT BUILDING TO REMAIN. THIS DOOR IS TO REMAIN CLEAR AT ALL TIMES.
6. NEW MEMBRANE ROOF.
7. MECHANICAL ROOFTOP EQUIPMENT. PROVIDE NEW ROOF
8. EXISTING DRINKING FOUNTAINS TO REMAIN WHERE THEY EXIST.
9. PROTECT DURING CONSTRUCTION.
10. PROTECT ELEVATOR CABS, FINISHES & DOORS DURING CONSTRUCTION
11. ALL BATHROOM FINISHES ARE TO REMAIN. PROTECT DURING CONSTRUCTION.
12. EXPOSED CONCRETE FLOOR. TYPICAL OF ALL U.N.O.
13. GYP. BD. WRAP. SEE DETAIL
14. REMOVE AND REPLACE ROOF DRAIN COVERS
15. STONE COPING TO BE INSPECTED AND REPAIRED AS REQ'D TO PROVIDE SECURE COPING. TYP OF ALL
16. NEW NON-RATED GYP. BD. WALLS TO MATCH ADJACENT FINISH.
17. REINSTALL SALVAGE DOOR.
18. VENT TO REMAIN.
19. EXISTING ROOF HATCH TO REMAIN.
20. REMOVED EXST'G HVAC CABINET THIS LOCATION ONLY.

A205

Project
Formica Building
115 E 5th Street
Cincinnati, Ohio 45202

No.	Revisions	Date
2	ENG CHG #1	11.11.2022

Sheet Title
TYPICAL RESIDENTIAL FLOOR CONSTRUCTION PLAN

Project No. 2022_259 Issue Date
Scale As Noted Drawn Checked

Formica Building
Office/Apartments
Auditor Address: 115 E. 5th Street, Actual Address: 120 E. 4th Street
Cincinnati OH 45202

modelgroup
DEVELOPMENT • CONSTRUCTION • MANAGEMENT
1826 Race Street
Cincinnati, Ohio 45202
513.559.0048

STATE OF OHIO
JOSEPH A. BODKIN
313367
REGISTERED ARCHITECT
Joseph A. Bodkin, License #313367
Expiration Date: 12.31.2023

city of CINCINNATI BUILDINGS & INSPECTIONS
APPROVED
CIN BD
2022P03573
02/01/23

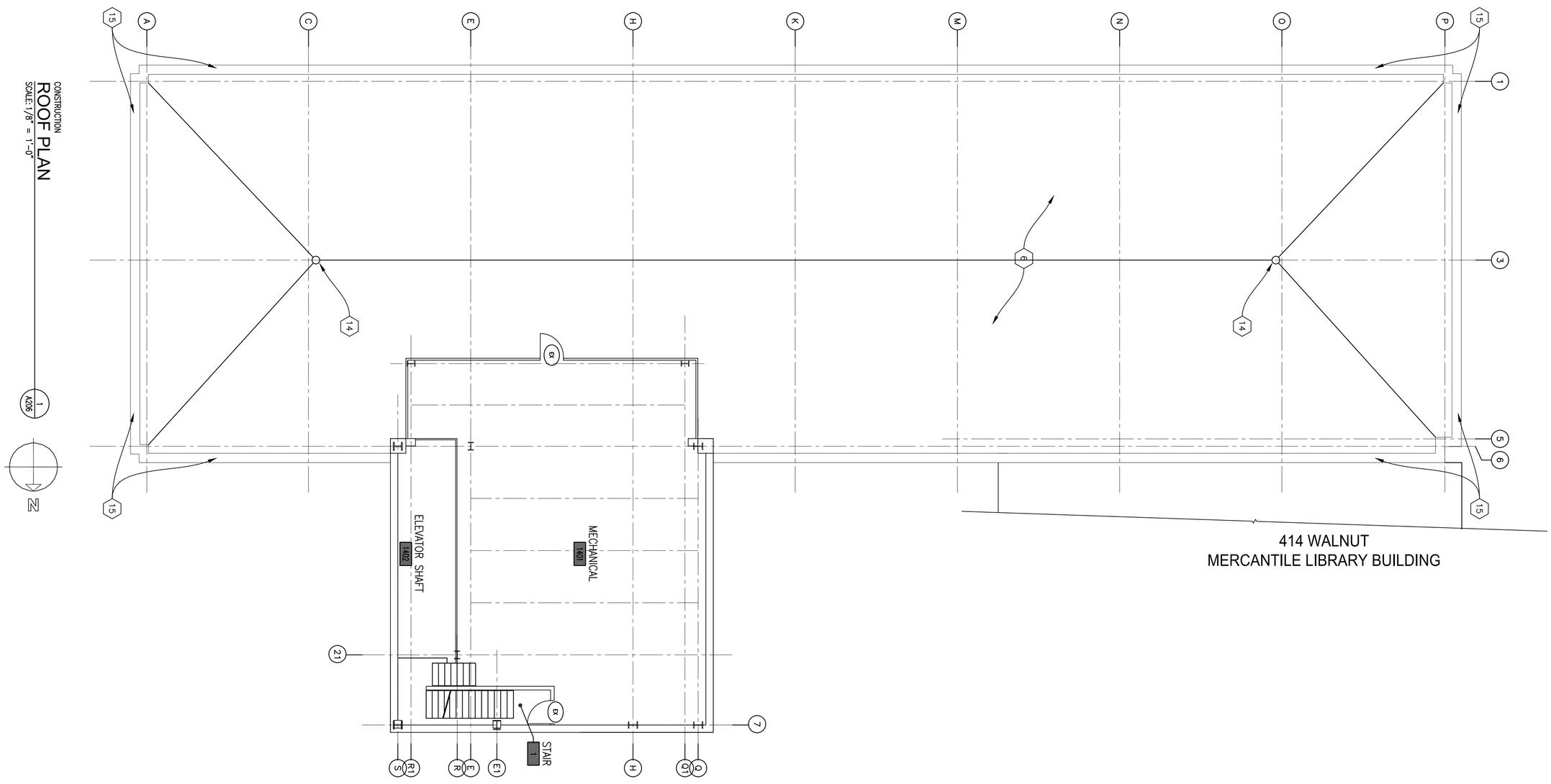

CONSTRUCTION
ROOF PLAN
SCALE: 1/8" = 1'-0"
1 A206

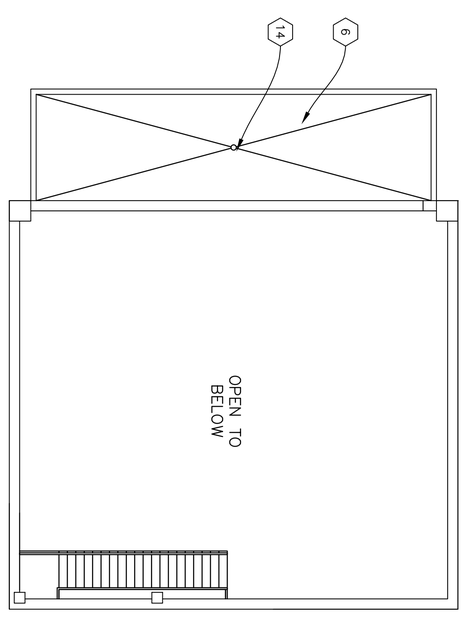

CONSTRUCTION
UPPER MECH ROOM PLAN
SCALE: 1/8" = 1'-0"
2 A206

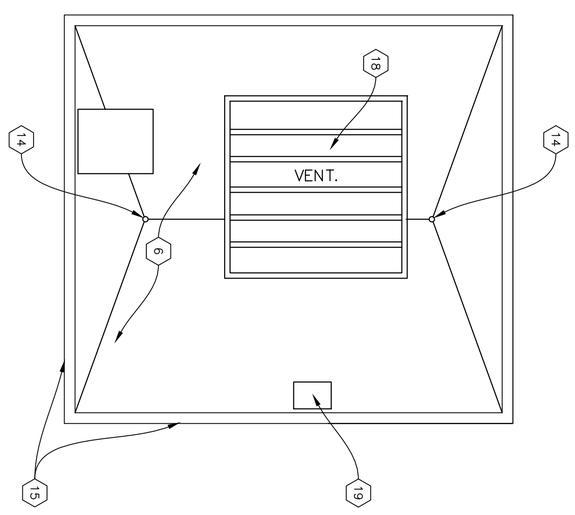

CONSTRUCTION
UPPER MECH ROOM ROOF PLAN
SCALE: 1/8" = 1'-0"
3 A206

GENERAL CONSTRUCTION NOTES:

A. ALL WALLS ARE TYPE 3 U.N.O.
B. SEE ENLARGED APARTMENT PLANS ON A300 SERIES SHEETS.
C. ALL EXST'G METAL STAIR GUARDRAILS AND HANDRAILS, METAL DOOR FRAMES ON FLOORS 3-13 ARE TO BE REPAIRED, CLEANED, SCRAPED, PRIMED & PAINTED. INSTALL ALL NEW HARDWARE EXCEPT HINGES.
D. ALL PAINTED SURFACES ARE TO BE CLEANED, PATCHED, PREPPED, PRIMED & PAINTED. TYP OF ALL.
E. ALL PAINTED METAL RAILS ARE TO BE REPAIRED CLEANED, PREPPED, PRIMED & PAINTED. U.N.O.
F. ALL FT&E BY OWNER.
G. REWORK SPRINKLERS AS REQUIRED FOR NEW WALLS & CEILINGS. SPRINKLER CONTRACTOR TO SUBMIT PERMITS FOR THEIR WORK.
H. ALL EXPOSED CONCRETE FLOORS ARE TO BE CLEANED OF ALL ...
I. ALL EXISTING EGRESS STAIRS ARE TO REMAIN FREE AND CLEAR. REPAIR ANY DAMAGE DONE TO THE WALLS THAT AFFECT IT'S RATING.
J. ALL SPRAY-ON FIREPROOFING IS TO REMAIN. ANY DAMAGED FIREPROOFING IS TO BE REPAIRED/REPLACED TO AN EQUIVALENT FIRE RATING.
K. ALL WINDOWS AND FRAMES ARE TO REMAIN. PROTECT DURING CONSTRUCTION.
L. ALL COLUMN DIMENSIONS ARE FOR REFERENCE ONLY. THEY HAVE NOT BEEN FIELD VERIFIED.

CONSTRUCTION PLAN NOTES:

1. ALL EXISTING METAL HVAC CABINETS TO REMAIN. PROTECT DURING CONSTRUCTION. ALL ARE TO BE PREPPED, PRIMED & REPAINTED. USE APPROPRIATE PAINT FOR METAL.
2. NEW WALL FINISH TO MATCH ADJACENT FINISHES. U.N.O.
3. NEW RATED RECESSED FIRE EXTINGUISHER CABINET. TYP OF ALL U.N.O.
4. PROVIDE & INSTALL NEW ELEVATOR FINISHES.
5. EXISTING RATED DOOR TO ADJACENT BUILDING TO REMAIN. THIS DOOR IS TO REMAIN CLEAR AT ALL TIMES.
6. NEW MEMBRANE ROOF.
7. ALL EXISTING DRINKING FOUNTAINS TO REMAIN WHERE THEY EXIST.
8. PROTECT DURING CONSTRUCTION.
9. SHAFT SPACE TO REMAIN.
10. PROTECT ELEVATOR CABS, FINISHES & DOORS DURING CONSTRUCTION
11. ALL BATHROOM FINISHES ARE TO REMAIN. PROTECT DURING CONSTRUCTION.
12. EXPOSED CONCRETE FLOOR. TYPICAL OF ALL U.N.O.
13. GYP. BD. WRAP. SEE DETAIL
14. REMOVE AND REPLACE ROOF DRAIN COVERS
15. STONE COPING TO BE INSPECTED AND REPAIRED AS REQ'D TO PROVIDE SECURE COPING. TYP OF ALL
16. NEW NON-RATED GYP. BD. WALLS TO MATCH ADJACENT FINISH.
17. REINSTALL SALVAGE DOOR.
18. VENT TO REMAIN.
19. EXISTING ROOF HATCH TO REMAIN.
20. REMOVED EXST'G HVAC CABINET THIS LOCATION ONLY.

A206

Project
Formica Building
115 E 5th Street
Cincinnati, Ohio 45202

No.	Revisions	Date
2	ENG CHG #1	11.11.2022

Sheet Title
ROOF CONSTRUCTION PLAN

Project No. 2022_259 Issue Date
Scale As Noted Drawn Checked

Formica Building

Office/Apartments

Auditor Address: 115 E. 5th Street, Actual Address: 120 E. 4th Street
Cincinnati OH 45202

modelgroup
DEVELOPMENT • CONSTRUCTION • MANAGEMENT
1826 Race Street
Cincinnati, Ohio 45202
513.559.0048

STATE OF OHIO
JOSEPH A. BODKIN
313367
REGISTERED ARCHITECT
Joseph A. Bodkin, License #313367
Expiration Date: 12.31.2023

GENERAL APARTMENT NOTES

A. DOOR FRAME SHALL BE 4" FROM FACE OF WALL TO BACKSIDE OF FRAME U.N.O.
B. ALL NEW UNIT PARTITIONS ARE TYPE 3 U.N.O.
C. DIMENSIONS ARE FROM FINISH FACE OF WALL TO FINISH FACE OF WALL U.N.O.
D. CENTER ALL CLOSET DOORS ON CLOSETS U.N.O.
E. ALL LIGHTING FOR REFERENCE ONLY.
F. ALL CABINET DRAWINGS ARE FOR DESIGN INTENT ONLY. CABINET MAKER TO SUBMIT DETAILED SHOP DRAWINGS FOR REVIEW. BASIS OF DESIGN ARE SMART CABINETS
I. ALL VISIBLE SIDES OF CABINETS ARE TO RECEIVE A FINISHED PANEL THAT MATCHES THE CABINETS. THIS INCLUDES CABINETS THAT ARE UP AGAINST THE RADIATORS AND/OR FACING THE WINDOWS. TYP OF ALL.
J. ALL APPLIANCES IN THE APARTMENT UNITS WILL BE NEW ENERGY STAR APPLIANCES.
K. PROVIDE BLOCKING FOR FUTURE GRAB BARS IN ALL UNIT BATHROOMS.
L. ALL PANTRY AND LINEN CLOSETS TO RECEIVE FIVE (5) ADJUSTABLE MELAMINE SHELVES.
M. ALL CLOSETS TO RECEIVE ONE (1) MELAMINE SHELF AND COAT ROD. U.N.O.
N. EACH SHOWER TO BE PROVIDED W/ GLASS SHOWER DOOR.
O. PROVIDE AND INSTALL IN EACH APARTMENT (2) TOWEL BARS, (1) TOILET PAPER HOLDER, (1) ROBE HOOK.

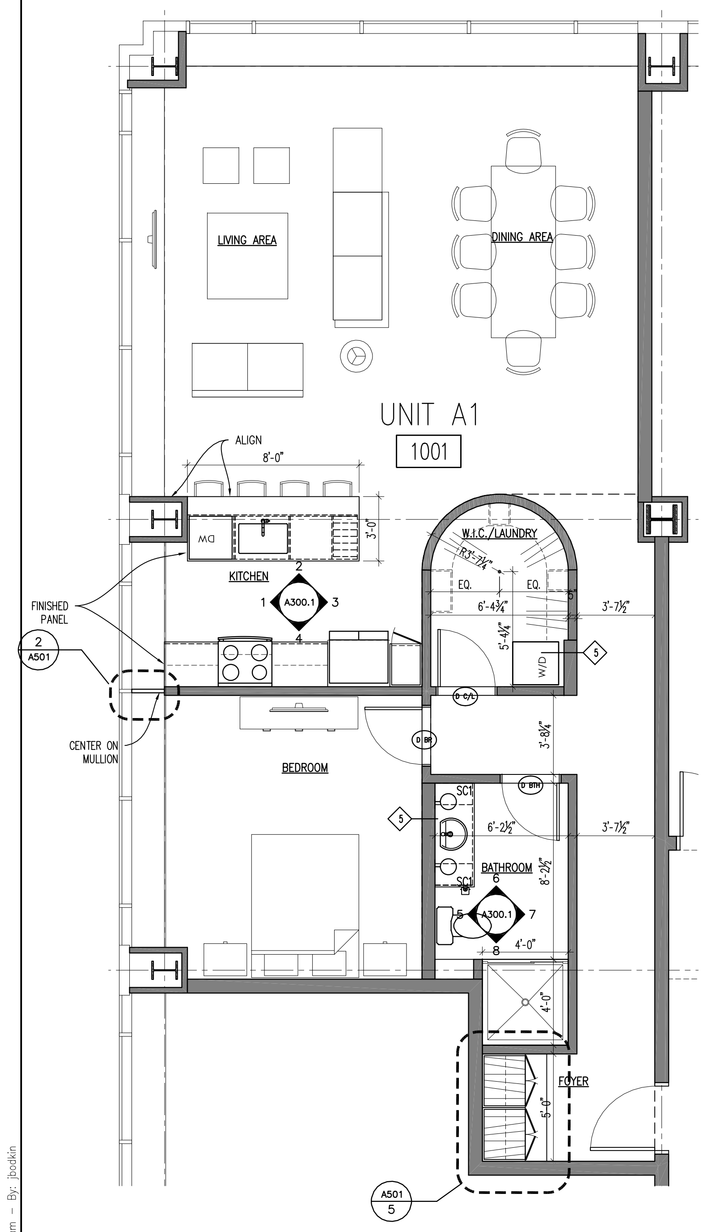

APARTMENT FLOOR PLAN
SCALE: 1/4" = 1'-0"
1 A300.1

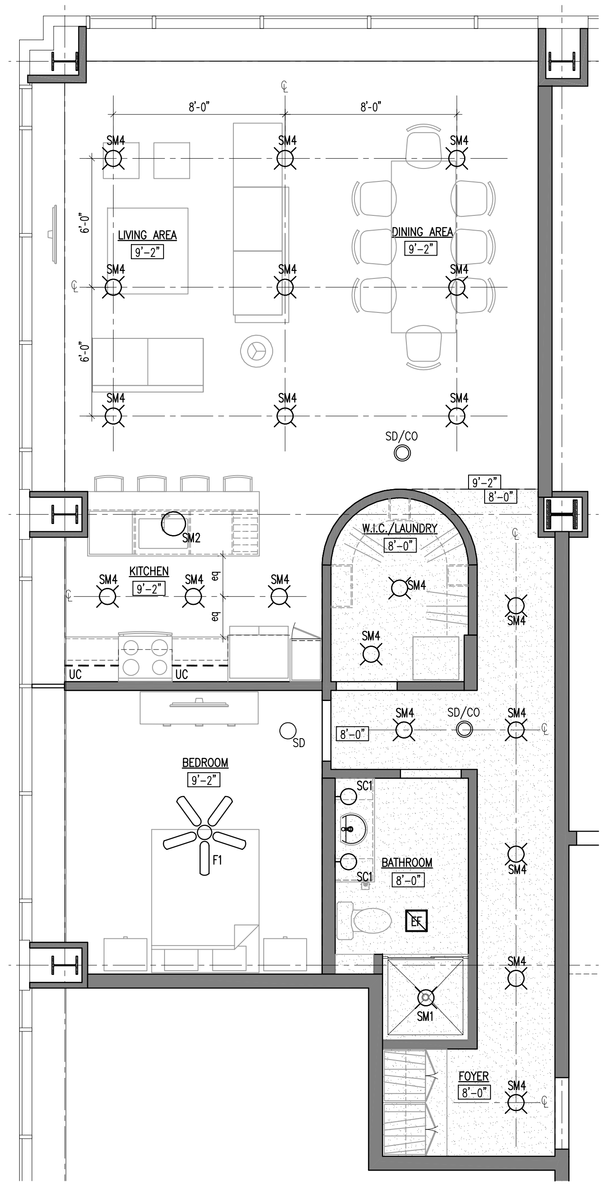

APARTMENT REFLECTED CEILING PLAN
SCALE: 1/4" = 1'-0"
2 A300.1

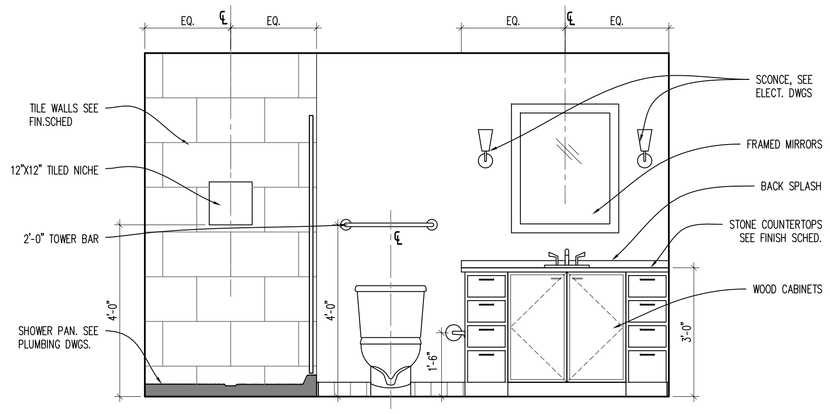

ELEVATION
SCALE: 1/2" = 1'-0"
5 A300.1

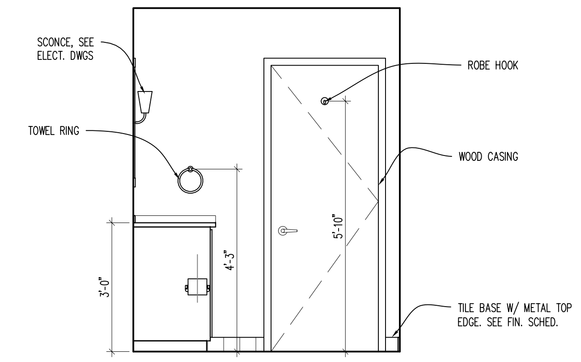

ELEVATION
SCALE: 1/2" = 1'-0"
6 A300.1

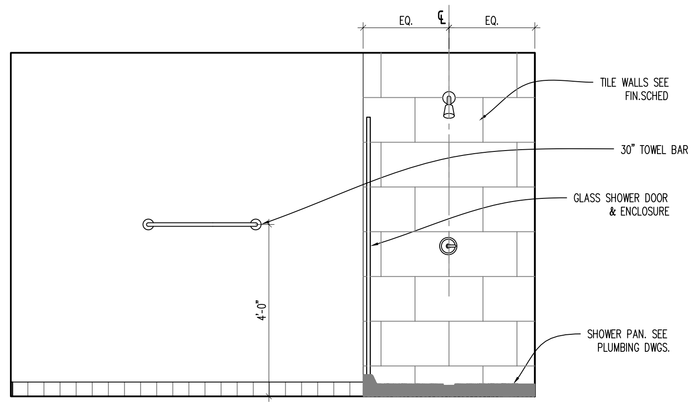

ELEVATION
SCALE: 1/2" = 1'-0"
7 A300.1

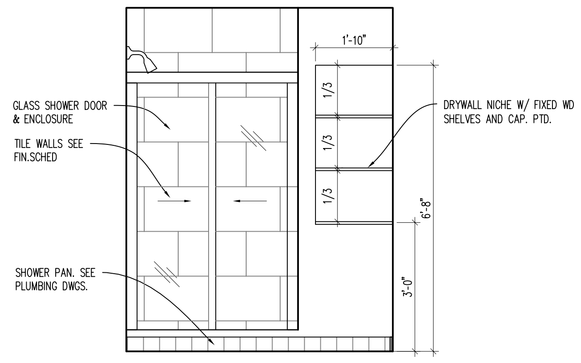

ELEVATION
SCALE: 1/2" = 1'-0"
8 A300.1

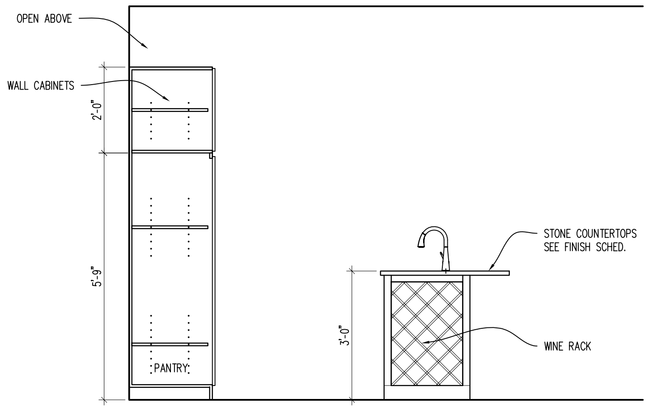

ELEVATION
SCALE: 1/2" = 1'-0"
1 A300.1

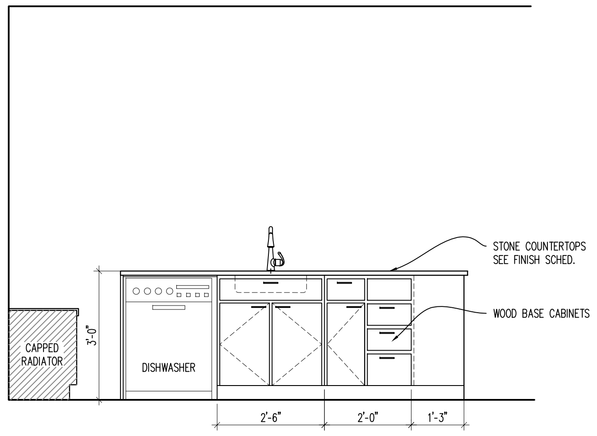

ELEVATION
SCALE: 1/2" = 1'-0"
2 A300.1

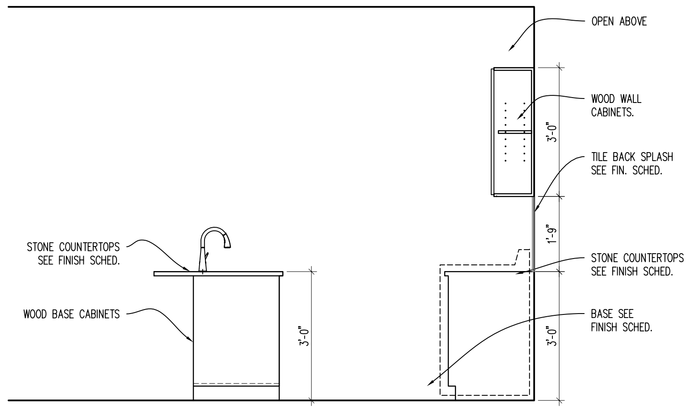

ELEVATION
SCALE: 1/2" = 1'-0"
3 A300.1

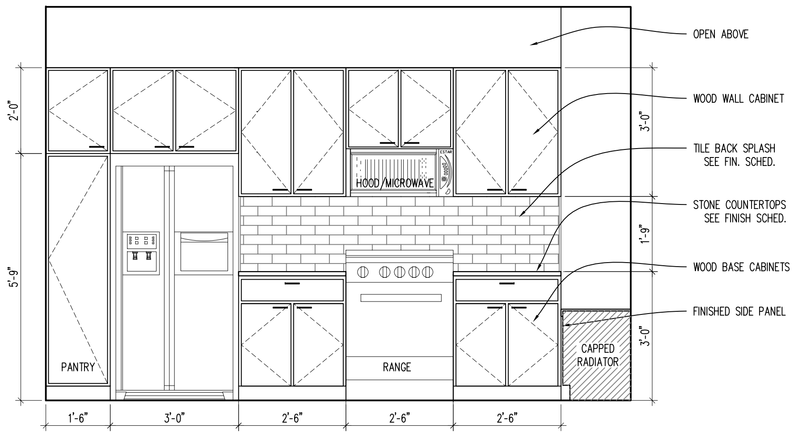

ELEVATION
SCALE: 1/2" = 1'-0"
4 A300.1

APARTMENT ROOM FINISH SCHEDULE

ROOM NAME	FLOOR	BASE	WALLS NORTH	WALLS SOUTH	WALLS EAST	WALLS WEST	CEILING	REMARKS	REV. NO.
LIVING AREA	VP-1	RB-3	PT-1	PT-1	PT-1	PT-1	PT-3	NOTES: A	
DINING AREA	VP-1	RB-3	PT-1	PT-1	PT-1	PT-1	PT-3	NOTES: A	
KITCHEN	VP-1	RB-3	PT-1	PT-1	PT-1	PT-1	PT-3	NOTES: A	
WALK-IN CLOSET / LAUNDRY	VP-1	RB-3	PT-1	PT-1	PT-1	PT-1	PT-3	NOTES: A	
BEDROOM	VP-1	RB-3	PT-1	PT-1	PT-1	PT-1	PT-3	NOTES: A	
BATHROOM	VP-1	RB-3	PT-1	PT-1	PT-1	PT-1	PT-3	NOTES: A	
FOYER / CORRIDOR	VP-1	RB-3	PT-1	PT-1	PT-1	PT-1	PT-3	NOTES: A	

NOTES:
A. ALL TRIM, CASINGS, DOORS, ETC ARE TO BE PAINTED. COLOR & SHEEN TBD.

APARTMENT DOOR SCHEDULE

DOOR MARK	DOOR LOCATION	DOOR INFORMATION SIZE WIDTH	HEIGHT	THICK	STYLE	DOOR MATERIAL	FRAME INFORMATION TYPE	FRAME MATERIAL	DETAIL HEAD	JAMB	OTHER	HDW. SET	FIRE RATING	REMARKS
D BR	BEDROOM	2'-8"	6'-8"	1 3/8"	2	OAK	A	WD	5/A600	6/A600	–	2	–	PRE-HUNG STAINED
D BTH	BATHROOM	2'-8"	6'-8"	1 3/8"	2	OAK	A	WD	5/A600	6/A600	–	2	–	PRE-HUNG STAINED
D C/L	CLOSET / LAUNDRY	2'-8"	6'-8"	1 3/8"	2	OAK	A	WD	5/A600	6/A600	–	3	–	PRE-HUNG STAINED

STATE OF OHIO JOSEPH A. BODNIN 515567 REGISTERED ARCHITECT
Joseph A. Bodnin, License #515567
Expiration Date: 12.31.2023

modelgroup
DEVELOPMENT • CONSTRUCTION • MANAGEMENT
1826 Race Street
Cincinnati, Ohio 45202
513.559.0048

Formica Building
Office/Apartments
Auditor Address: 115 E. 5th Street, Actual Address: 120 E. 4th Street
Cincinnati OH 45202

No.	Revisions	Date
A	ENG CHG #1	11.14.2022

Project: Formica Building
115 E 5th Street
Cincinnati, Ohio 45202
Sheet Title: Unit A1
Construction
Issue Date
Project #: 2022_259
Scale: As Noted
Drawn
Checked

A300.1

APPROVED
CIN BD
2022P03573
02/01/23
cityof CINCINNATI BUILDINGS & INSPECTIONS

C:\Users\jbodnin\Dropbox\01 INDG Projects\Formica Building\From Ten1_PHASE C\CADs - Phase C - From Ten1\03_Formica_A300 - Floors 3-10.dwg-A300.1 - A1 Plot Date/Time: Nov 15, 2022 - 7:56am - By: jbodnin

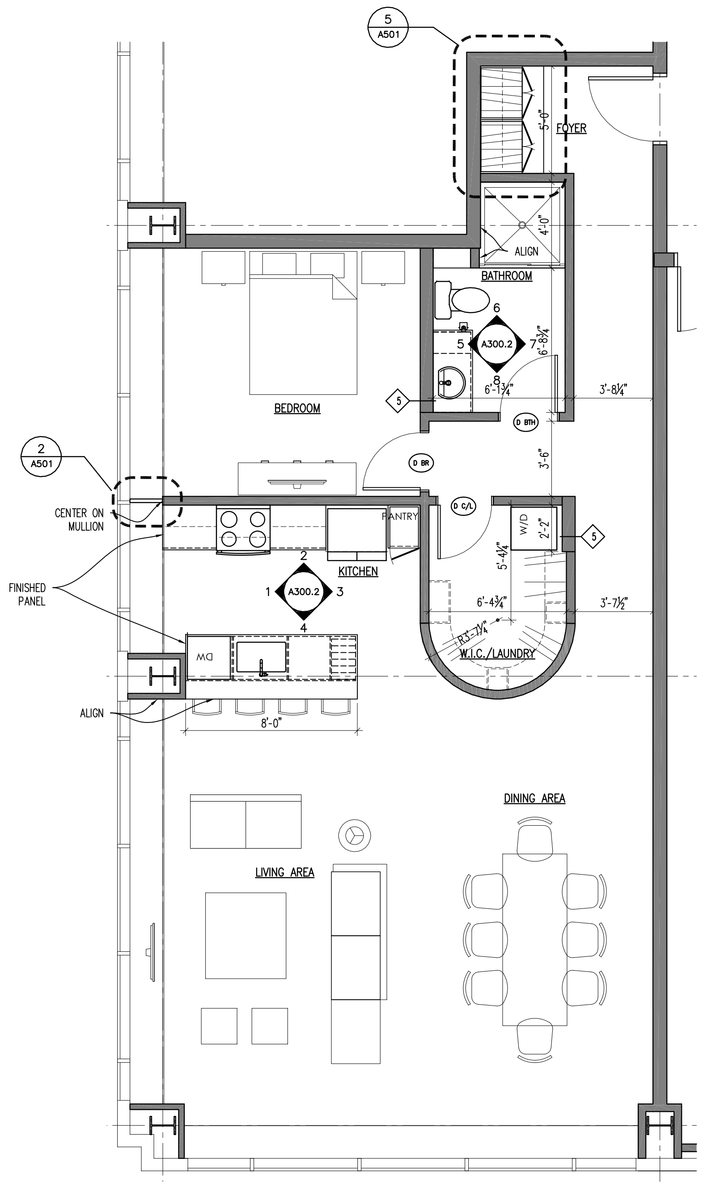

APARTMENT FLOOR PLAN
SCALE: 1/4" = 1'-0"
1 A300.2

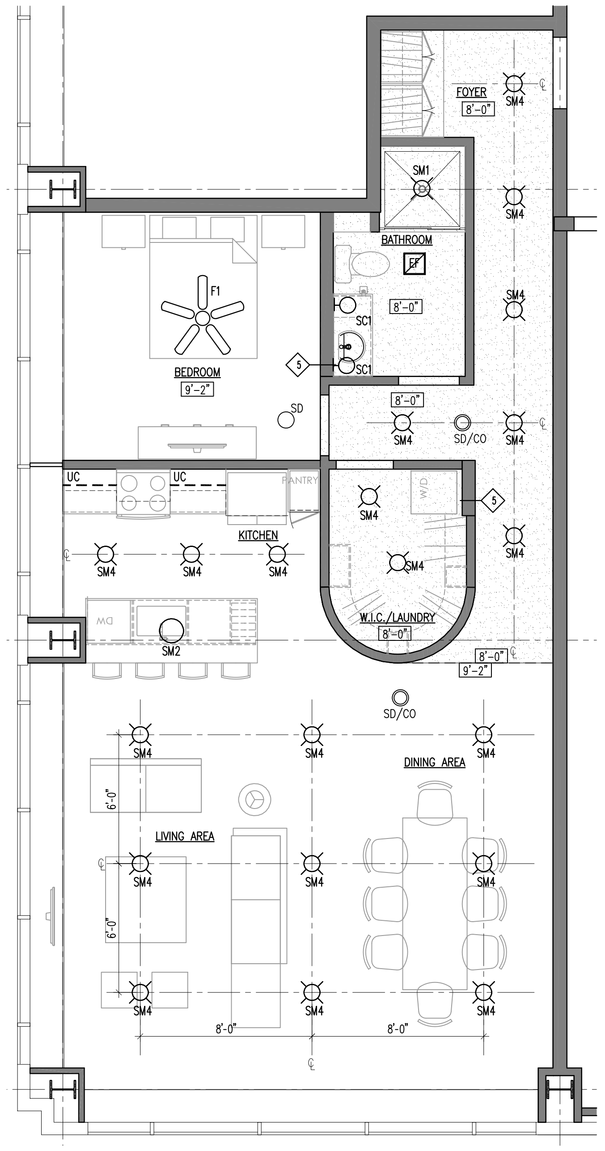

APARTMENT REFLECTED CEILING PLAN
SCALE: 1/4" = 1'-0"
2 A300.2

GENERAL APARTMENT NOTES

A. DOOR FRAME SHALL BE 4" FROM FACE OF WALL TO BACKSIDE OF FRAME U.N.O.
B. ALL NEW UNIT PARTITIONS ARE TYPE 3 U.N.O.
C. DIMENSIONS ARE FROM FINISH FACE OF WALL TO FINISH FACE OF WALL U.N.O.
D. CENTER ALL CLOSET DOORS ON CLOSETS U.N.O.
E. ALL LIGHTING FOR REFERENCE ONLY.
F. ALL CABINET DRAWINGS ARE FOR DESIGN INTENT ONLY. CABINET MAKER TO SUBMIT DETAILED SHOP DRAWINGS FOR REVIEW. BASIS OF DESIGN ARE SMART CABINETS
I. ALL VISIBLE SIDES OF CABINETS ARE TO RECEIVE A FINISHED PANEL THAT MATCHES THE CABINETS. THIS INCLUDES CABINETS THAT ARE UP AGAINST THE RADIATORS AND/OR FACING THE WINDOWS. TYP OF ALL.
J. ALL APPLIANCES IN THE APARTMENT UNITS WILL BE NEW ENERGY STAR APPLIANCES.
K. PROVIDE BLOCKING FOR FUTURE GRAB BARS IN ALL UNIT BATHROOMS.
L. ALL PANTRY AND LINEN CLOSETS TO RECEIVE FIVE (5) ADJUSTABLE MELAMINE SHELVES.
M. ALL CLOSETS TO RECEIVE ONE (1) MELAMINE SHELF AND COAT ROD. U.N.O.
N. EACH SHOWER TO BE PROVIDED W/ GLASS SHOWER DOOR.
O. PROVIDE AND INSTALL IN EACH APARTMENT (2) TOWEL BARS, (1) TOILET PAPER HOLDER, (1) ROBE HOOK.

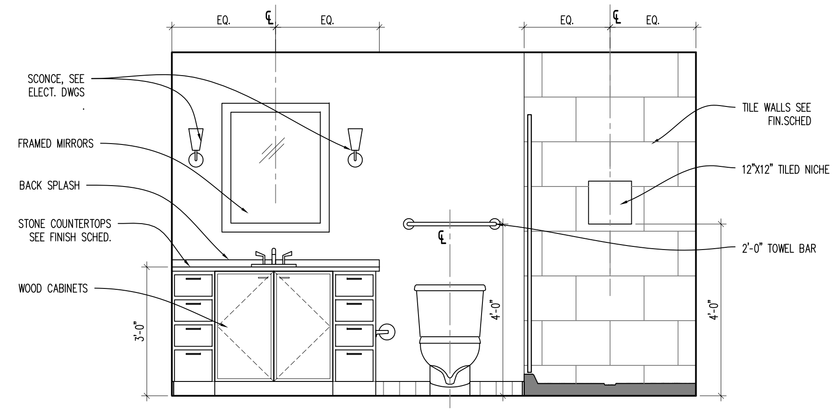

ELEVATION
SCALE: 1/2" = 1'-0"
5 A300.2

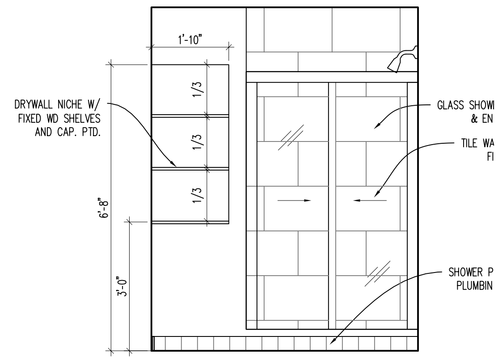

ELEVATION
SCALE: 1/2" = 1'-0"
6 A300.2

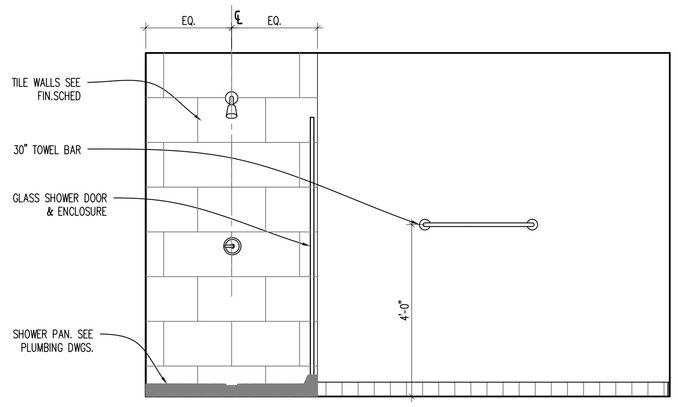

ELEVATION
SCALE: 1/2" = 1'-0"
7 A300.2

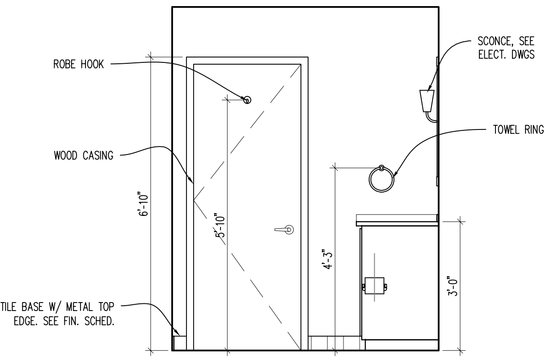

ELEVATION
SCALE: 1/2" = 1'-0"
8 A300.2

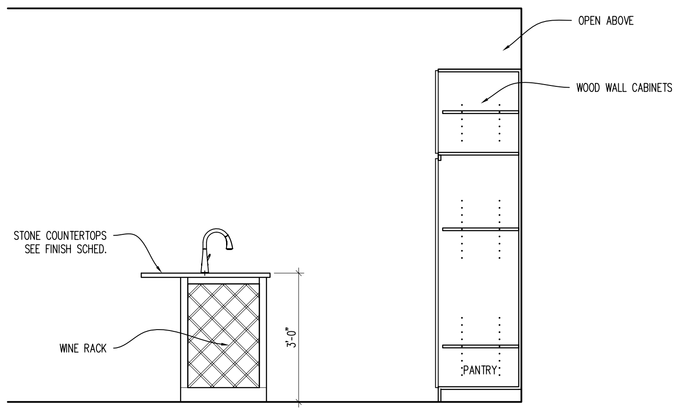

ELEVATION
SCALE: 1/2" = 1'-0"
1 A300.2

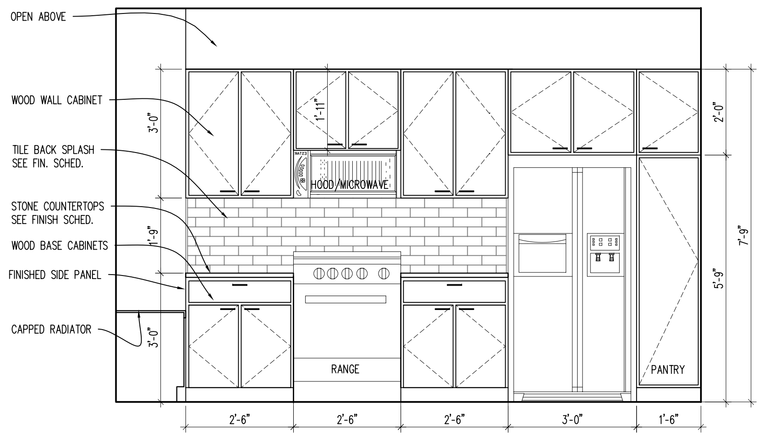

ELEVATION
SCALE: 1/2" = 1'-0"
2 A300.2

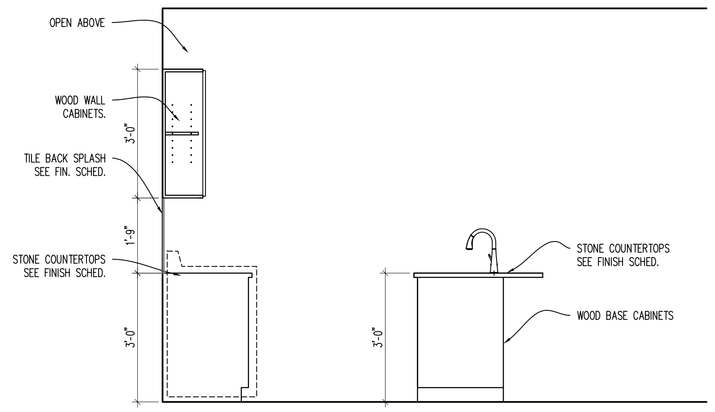

ELEVATION
SCALE: 1/2" = 1'-0"
3 A300.2

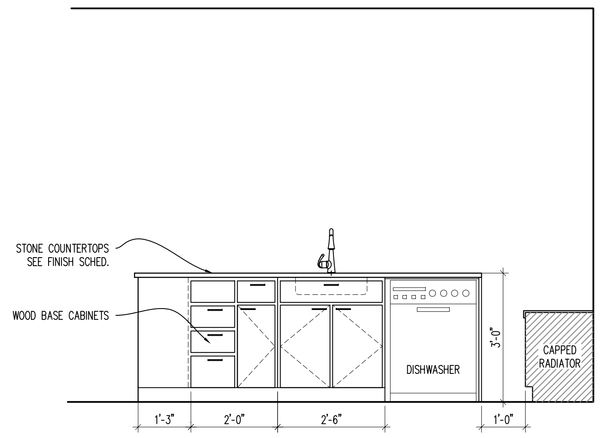

ELEVATION
SCALE: 1/2" = 1'-0"
4 A300.2

APARTMENT ROOM FINISH SCHEDULE

ROOM NAME	FLOOR	BASE	WALLS NORTH	WALLS SOUTH	WALLS EAST	WALLS WEST	CEILING	REMARKS	REV. NO.
LIVING AREA	VP-1	RB-3	PT-1	PT-1	PT-1	PT-1	PT-3	NOTES: A	
DINING AREA	VP-1	RB-3	PT-1	PT-1	PT-1	PT-1	PT-3	NOTES: A	
KITCHEN	VP-1	RB-3	PT-1	PT-1	PT-1	PT-1	PT-3	NOTES: A	
WALK-IN CLOSET / LAUNDRY	VP-1	RB-3	PT-1	PT-1	PT-1	PT-1	PT-3	NOTES: A	
BEDROOM	VP-1	RB-3	PT-1	PT-1	PT-1	PT-1	PT-3	NOTES: A	
BATHROOM	VP-1	RB-3	PT-1	PT-1	PT-1	PT-1	PT-3	NOTES: A	
FOYER / CORRIDOR	VP-1	RB-3	PT-1	PT-1	PT-1	PT-1	PT-3	NOTES: A	

NOTES:
A. ALL TRIM, CASINGS, DOORS, ETC ARE TO BE PAINTED. COLOR & SHEEN TBD.

APARTMENT DOOR SCHEDULE

DOOR MARK	DOOR LOCATION	DOOR INFORMATION SIZE WIDTH	HEIGHT	THICK	STYLE	DOOR MATERIAL	FRAME INFORMATION TYPE	FRAME MATERIAL	DETAIL HEAD	JAMB	OTHER	HDW. SET	FIRE RATING	REMARKS
D BR	BEDROOM	2'-8"	6'-8"	1 3/8"	2	OAK	A	WD	5/A600	6/A600	–	2	–	PRE-HUNG STAINED
D BTH	BATHROOM	2'-8"	6'-8"	1 3/8"	2	OAK	A	WD	5/A600	6/A600	–	2	–	PRE-HUNG STAINED
D C/L	CLOSET / LAUNDRY	2'-8"	6'-8"	1 3/8"	2	OAK	A	WD	5/A600	6/A600	–	3	–	PRE-HUNG STAINED

STATE OF OHIO JOSEPH A. BODKIN 3135567 REGISTERED ARCHITECT
Joseph A. Bodkin, License #3135567
Expiration Date: 12.31.2023

modelgroup
DEVELOPMENT • CONSTRUCTION • MANAGEMENT
1826 Race Street
Cincinnati, Ohio 45202
513.559.0048

Formica Building

Office/Apartments
Auditor Address: 115 E. 5th Street, Actual Address: 120 E. 4th Street
Cincinnati OH 45202

No.	Revisions	Date
1	ENG CHG #1	11.14.2022

Project: Formica Building
115 E 5th Street
Cincinnati, Ohio 45202
Sheet Title: Unit A.2
Construction
Project #: 2022_259
Issue Date
Scale: As Noted
Drawn
Checked

A300.2

APPROVED
CIN BD
2022P03573
02/01/23
city of CINCINNATI BUILDINGS & INSPECTIONS

C:\Users\jbodkin\Dropbox\01_NVDP_Projects\03_Formica\1st\1_PHASE C\ADs - Phase C - From 1st\03_Formica_A300 - Floors 3-10.dwg-A300.2 - A2 Plot Date/Time: Nov 15, 2022-7:57am - By: jbodkin

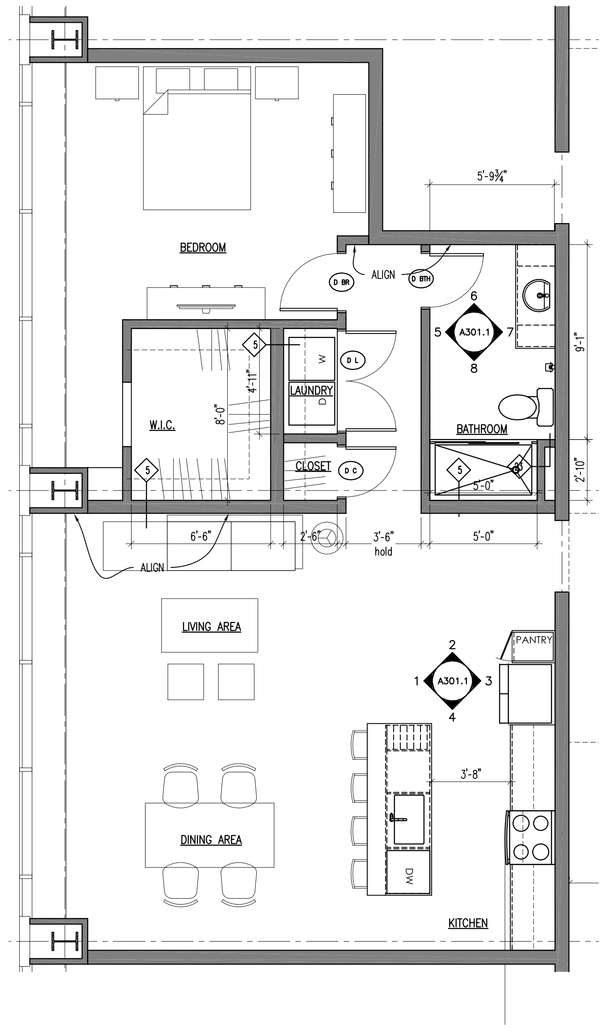

APARTMENT FLOOR PLAN
SCALE: 1/4" = 1'-0"
1 A301.1

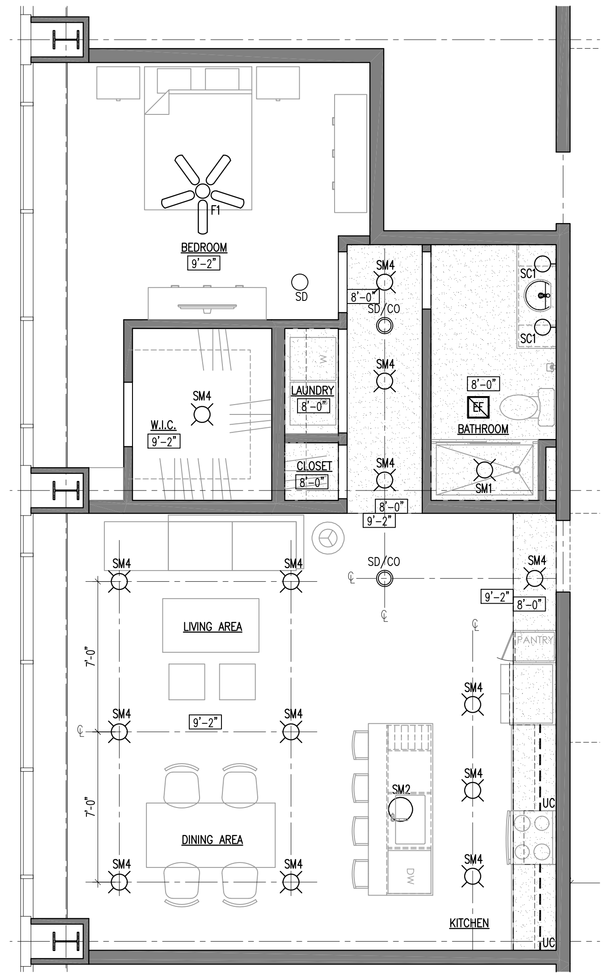

APARTMENT REFLECTED CEILING PLAN
SCALE: 1/4" = 1'-0"
2 A301.1

GENERAL APARTMENT NOTES

A. DOOR FRAME SHALL BE 4" FROM FACE OF WALL TO BACKSIDE OF FRAME U.N.O.
B. ALL NEW UNIT PARTITIONS ARE TYPE 3 U.N.O.
C. DIMENSIONS ARE FROM FINISH FACE OF WALL TO FINISH FACE OF WALL U.N.O.
D. CENTER ALL CLOSET DOORS ON CLOSETS U.N.O.
E. ALL LIGHTING FOR REFERENCE ONLY.
F. ALL CABINET DRAWINGS ARE FOR DESIGN INTENT ONLY. CABINET MAKER TO SUBMIT DETAILED SHOP DRAWINGS FOR REVIEW. BASIS OF DESIGN ARE SMART CABINETS
I. ALL VISIBLE SIDES OF CABINETS ARE TO RECEIVE A FINISHED PANEL THAT MATCHES THE CABINETS. THIS INCLUDES CABINETS THAT ARE UP AGAINST THE RADIATORS AND/OR FACING THE WINDOWS. TYP OF ALL.
J. ALL APPLIANCES IN THE APARTMENT UNITS WILL BE NEW ENERGY STAR APPLIANCES.
K. PROVIDE BLOCKING FOR FUTURE GRAB BARS IN ALL UNIT BATHROOMS.
L. ALL PANTRY AND LINEN CLOSETS TO RECEIVE FIVE (5) ADJUSTABLE MELAMINE SHELVES.
M. ALL CLOSETS TO RECEIVE ONE (1) MELAMINE SHELF AND COAT ROD. U.N.O.
N. EACH SHOWER TO BE PROVIDED W/ GLASS SHOWER DOOR.
O. PROVIDE AND INSTALL IN EACH APARTMENT (2) TOWEL BARS, (1) TOILET PAPER HOLDER, (1) ROBE HOOK.

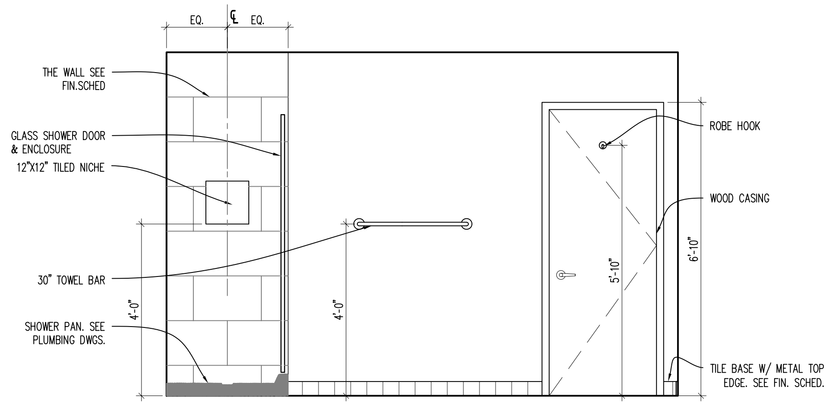

ELEVATION
SCALE: 1/2" = 1'-0"
5 A301.1

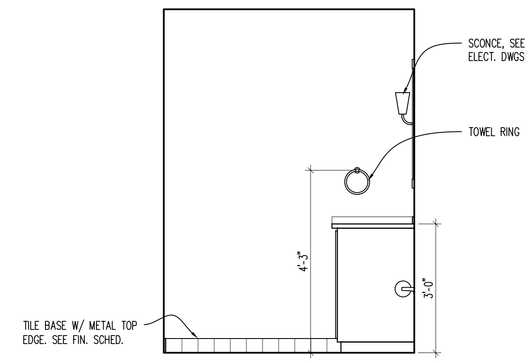

ELEVATION
SCALE: 1/2" = 1'-0"
6 A301.1

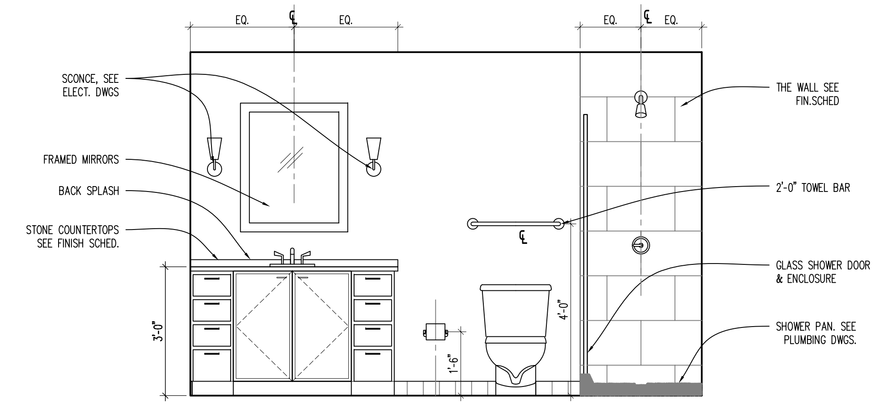

ELEVATION
SCALE: 1/2" = 1'-0"
7 A301.1

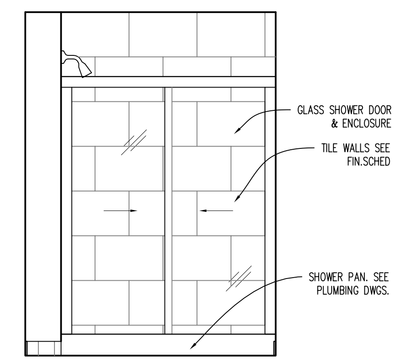

ELEVATION
SCALE: 1/2" = 1'-0"
8 A301.1

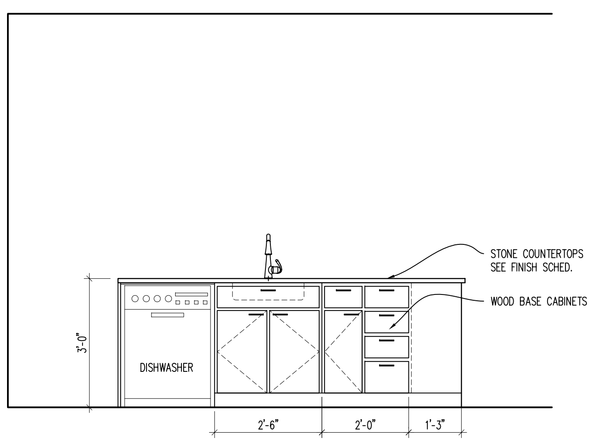

ELEVATION
SCALE: 1/2" = 1'-0"
1 A301.1

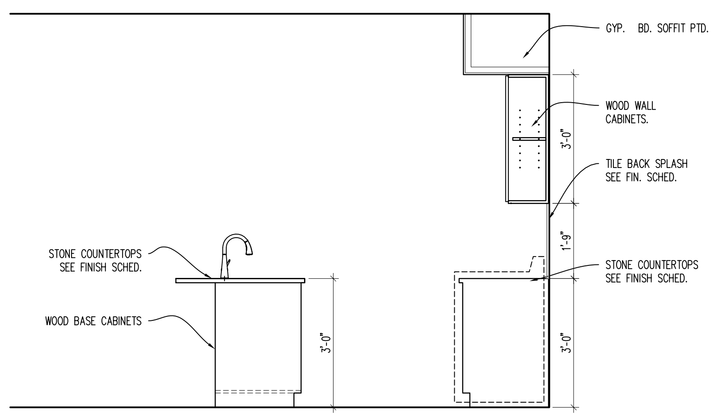

ELEVATION
SCALE: 1/2" = 1'-0"
2 A301.1

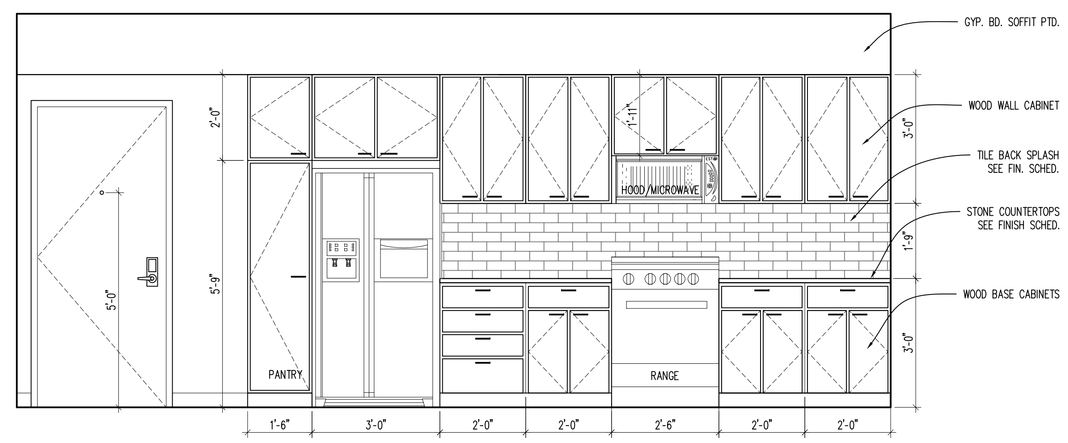

ELEVATION
SCALE: 1/2" = 1'-0"
3 A301.1

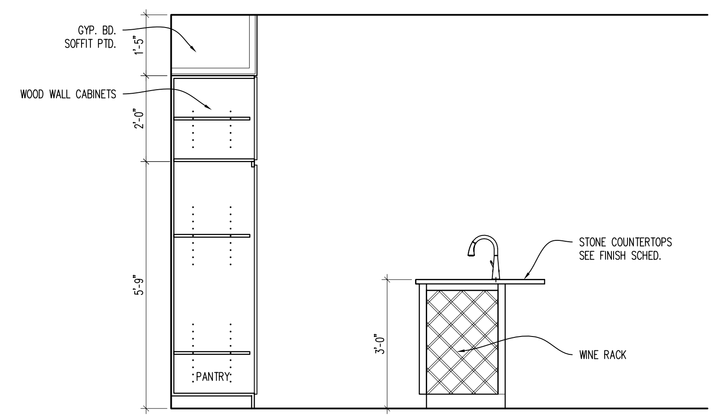

ELEVATION
SCALE: 1/2" = 1'-0"
4 A301.1

APARTMENT ROOM FINISH SCHEDULE

ROOM NAME	FLOOR	BASE	WALLS NORTH	WALLS SOUTH	WALLS EAST	WALLS WEST	CEILING	REMARKS	REV. NO.
LIVING AREA	VP-1	RB-3	PT-1	PT-1	PT-1	PT-1	PT-3	NOTES: A	
DINING AREA	VP-1	RB-3	PT-1	PT-1	PT-1	PT-1	PT-3	NOTES: A	
KITCHEN	VP-1	RB-3	PT-1	PT-1	PT-1	PT-1	PT-3	NOTES: A	
CLOSET	VP-1	RB-3	PT-1	PT-1	PT-1	PT-1	PT-3	NOTES: A	
LAUNDRY	VP-1	RB-3	PT-1	PT-1	PT-1	PT-1	PT-3	NOTES: A	
BEDROOM	VP-1	RB-3	PT-1	PT-1	PT-1	PT-1	PT-3	NOTES: A	
WALK-IN CLOSET	VP-1	RB-3	PT-1	PT-1	PT-1	PT-1	PT-3	NOTES: A	
BATHROOM	VP-1	RB-3	PT-1	PT-1	PT-1	PT-1	PT-3	NOTES: A	
FOYER / CORRIDOR	VP-1	RB-3	PT-1	PT-1	PT-1	PT-1	PT-3	NOTES: A	

NOTES:
A. ALL TRIM, CASINGS, DOORS, ETC ARE TO BE PAINTED. COLOR & SHEEN TBD.

APARTMENT DOOR SCHEDULE

DOOR MARK	DOOR LOCATION	DOOR INFORMATION SIZE WIDTH	HEIGHT	THICK	STYLE	DOOR MATERIAL	FRAME INFORMATION TYPE	FRAME MATERIAL	DETAIL HEAD	JAMB	OTHER	HDW. SET	FIRE RATING	REMARKS
D BR	BEDROOM	2'-8"	6'-8"	1 3/8"	2	OAK	A	WD	5/A600	6/A600	–	2	–	PRE-HUNG STAINED
D BTH	BATHROOM	2'-8"	6'-8"	1 3/8"	2	OAK	A	WD	5/A600	6/A600	–	2	–	PRE-HUNG STAINED
D C	CLOSET	2'-4"	6'-8"	1 3/8"	2	OAK	A	WD	5/A600	6/A600	–	3	–	PRE-HUNG STAINED
D L	LAUNDRY	(2'-4"x2) 4'-8"	6'-8"	1 3/8"	2	OAK	A	WD	5/A600	6/A600	–	4	–	PRE-HUNG STAINED

STATE OF OHIO JOSEPH A. BODKIN 3135567 REGISTERED ARCHITECT
Joseph A. Bodkin, License #3135567
Expiration Date: 12.31.2023

modelgroup
DEVELOPMENT • CONSTRUCTION • MANAGEMENT
1826 Race Street
Cincinnati, Ohio 45202
513.559.0048

Formica Building
Office/Apartments
Auditor Address: 115 E. 5th Street, Actual Address: 120 E. 4th Street
Cincinnati OH 45202

No.	Revisions	Date
2	ENG CHG #1	11.14.2022

Project: Formica Building
115 E 5th Street
Cincinnati, Ohio 45202
Sheet Title: Unit B.1
Construction
Project #: 2022_259
Issue Date
Scale: As Noted
Drawn
Checked

A301.1

APPROVED
CIN BD
2022P03573
02/01/23
city of CINCINNATI BUILDINGS & INSPECTIONS

C:\Users\jbodkin\Dropbox\01_NEW_Projects\20_Formica\From 1st\1_PHASE C\CADs - Phase C - From 1st\03_Formica_A300 - Floors 3-10.dwg-A301.1 - B1. Plot Date/Time: Nov 15, 2022-7:58am - By: jbodkin

GENERAL APARTMENT NOTES

A. DOOR FRAME SHALL BE 4" FROM FACE OF WALL TO BACKSIDE OF FRAME U.N.O.
B. ALL NEW UNIT PARTITIONS ARE TYPE 3 U.N.O.
C. DIMENSIONS ARE FROM FINISH FACE OF WALL TO FINISH FACE OF WALL U.N.O.
D. CENTER ALL CLOSET DOORS ON CLOSETS U.N.O.
E. ALL LIGHTING FOR REFERENCE ONLY.
F. ALL CABINET DRAWINGS ARE FOR DESIGN INTENT ONLY. CABINET MAKER TO SUBMIT DETAILED SHOP DRAWINGS FOR REVIEW. BASIS OF DESIGN ARE SMART CABINETS
I. ALL VISIBLE SIDES OF CABINETS ARE TO RECEIVE A FINISHED PANEL THAT MATCHES THE CABINETS. THIS INCLUDES CABINETS THAT ARE UP AGAINST THE RADIATORS AND/OR FACING THE WINDOWS. TYP OF ALL.
J. ALL APPLIANCES IN THE APARTMENT UNITS WILL BE NEW ENERGY STAR APPLIANCES.
K. PROVIDE BLOCKING FOR FUTURE GRAB BARS IN ALL UNIT BATHROOMS.
L. ALL PANTRY AND LINEN CLOSETS TO RECEIVE FIVE (5) ADJUSTABLE MELAMINE SHELVES.
M. ALL CLOSETS TO RECEIVE ONE (1) MELAMINE SHELF AND COAT ROD. U.N.O.
N. EACH SHOWER TO BE PROVIDED W/ GLASS SHOWER DOOR.
O. PROVIDE AND INSTALL IN EACH APARTMENT (2) TOWEL BARS, (1) TOILET PAPER HOLDER, (1) ROBE HOOK.

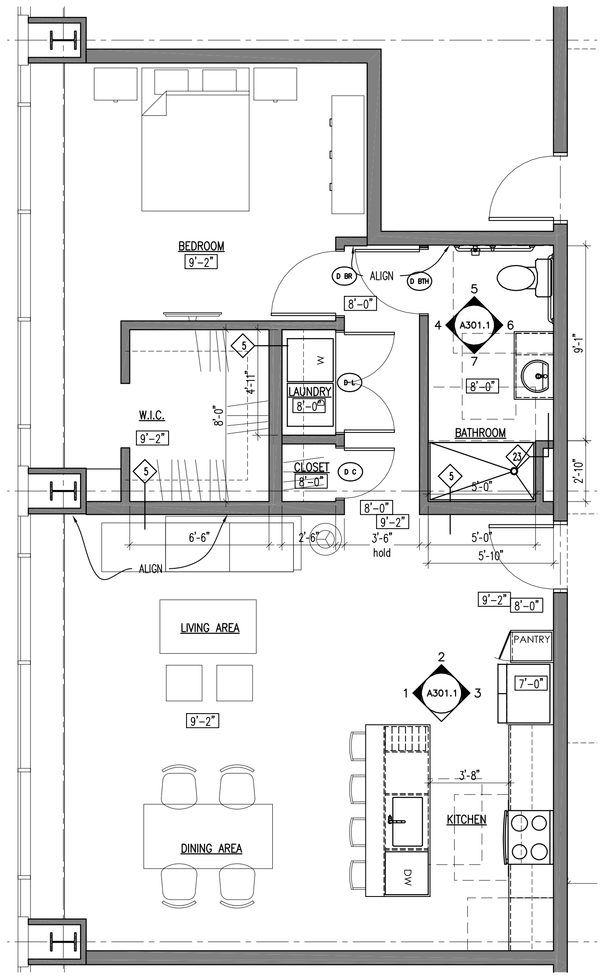

APARTMENT FLOOR PLAN - ADA
SCALE: 1/4" = 1'-0"
1 / A301

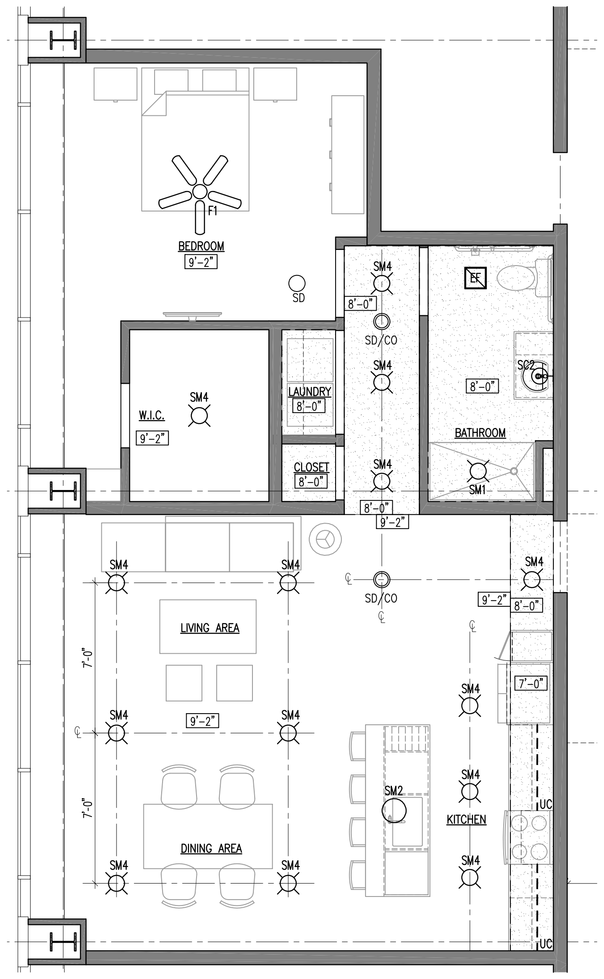

APARTMENT REFLECTED CEILING PLAN
SCALE: 1/4" = 1'-0"
2 / A301

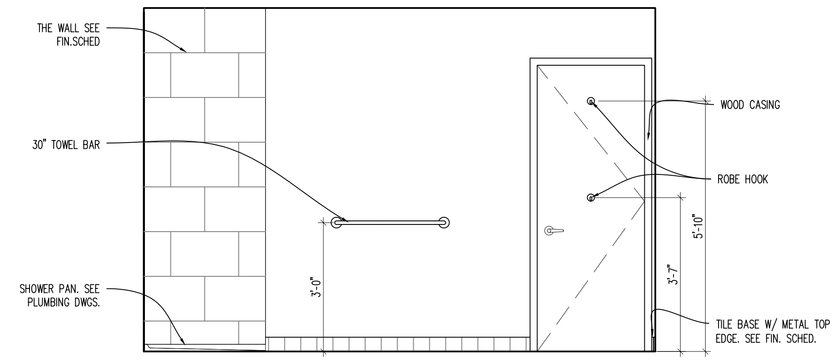

ELEVATION
SCALE: 1/2" = 1'-0"
4 / A301.ADA

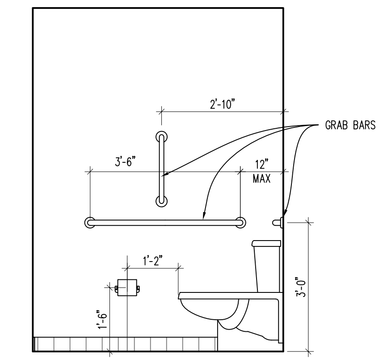

ELEVATION
SCALE: 1/2" = 1'-0"
5 / A301.ADA

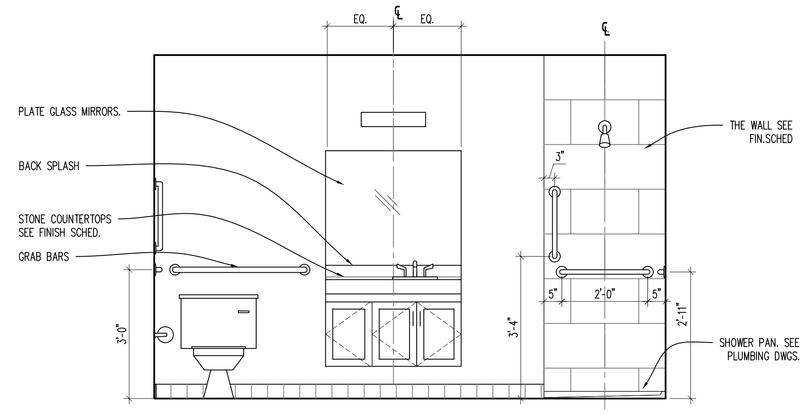

ELEVATION
SCALE: 1/2" = 1'-0"
6 / A301.ADA

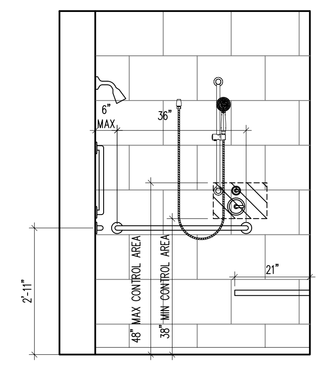

ELEVATION
SCALE: 1/2" = 1'-0"
7 / A301.ADA

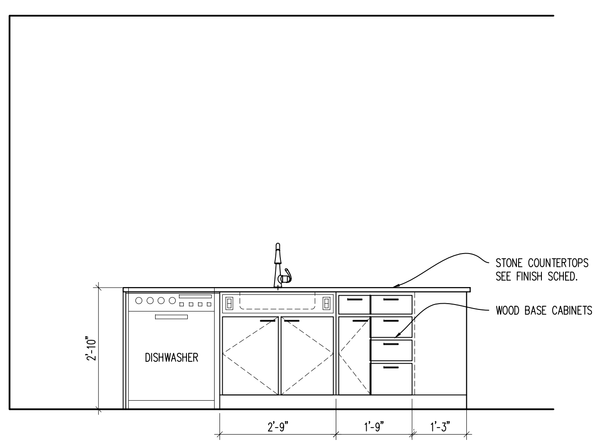

ELEVATION
SCALE: 1/2" = 1'-0"
1 / A301.ADA

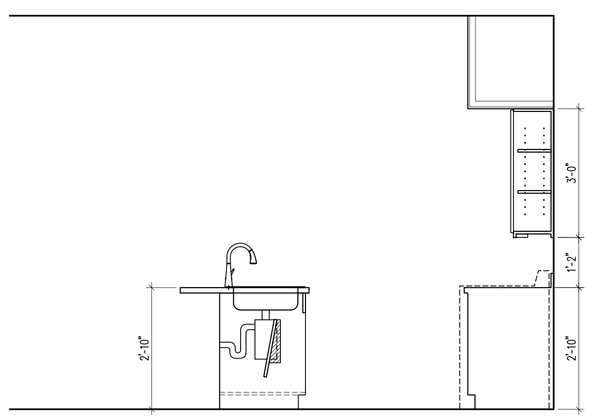

ELEVATION
SCALE: 1/2" = 1'-0"
2 / A301.ADA

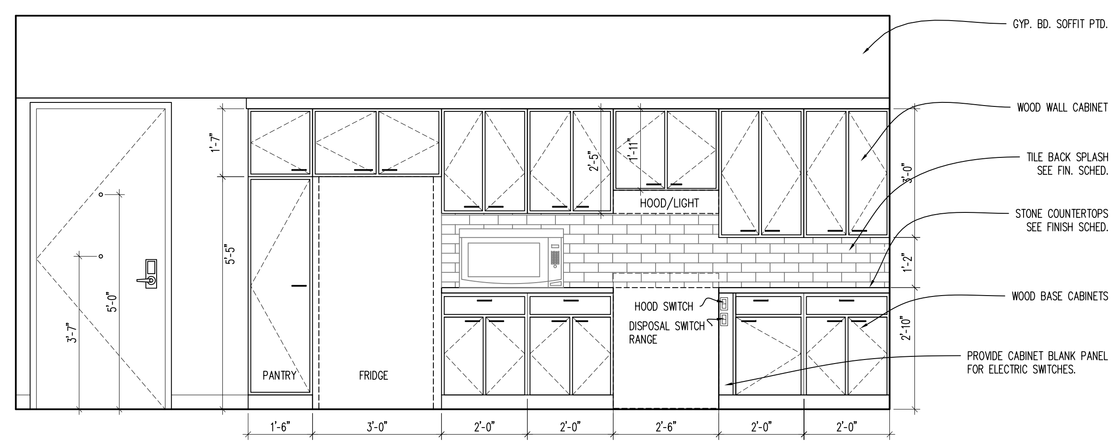

ELEVATION
SCALE: 1/2" = 1'-0"
3 / A301.ADA

APARTMENT ROOM FINISH SCHEDULE

ROOM NAME	FLOOR	BASE	WALLS NORTH	WALLS SOUTH	WALLS EAST	WALLS WEST	CEILING	REMARKS	REV. NO.
LIVING AREA	VP-1	RB-3	PT-1	PT-1	PT-1	PT-1	PT-3	NOTES: A	
DINING AREA	VP-1	RB-3	PT-1	PT-1	PT-1	PT-1	PT-3	NOTES: A	
KITCHEN	VP-1	RB-3	PT-1	PT-1	PT-1	PT-1	PT-3	NOTES: A	
CLOSET	VP-1	RB-3	PT-1	PT-1	PT-1	PT-1	PT-3	NOTES: A	
LAUNDRY	VP-1	RB-3	PT-1	PT-1	PT-1	PT-1	PT-3	NOTES: A	
BEDROOM	VP-1	RB-3	PT-1	PT-1	PT-1	PT-1	PT-3	NOTES: A	
WALK-IN CLOSET	VP-1	RB-3	PT-1	PT-1	PT-1	PT-1	PT-3	NOTES: A	
BATHROOM	VP-1	RB-3	PT-1	PT-1	PT-1	PT-1	PT-3	NOTES: A	
FOYER / CORRIDOR	VP-1	RB-3	PT-1	PT-1	PT-1	PT-1	PT-3	NOTES: A	

NOTES:
A. ALL TRIM, CASINGS, DOORS, ETC ARE TO BE PAINTED. COLOR & SHEEN TBD.

APARTMENT DOOR SCHEDULE

DOOR MARK	DOOR LOCATION	DOOR INFORMATION SIZE WIDTH	HEIGHT	THICK	STYLE	DOOR MATERIAL	FRAME INFORMATION TYPE	FRAME MATERIAL	DETAIL HEAD	JAMB	OTHER	HDW. SET	FIRE RATING	REMARKS
D BR	BEDROOM	3'-0"	6'-8"	1 3/8"	2	OAK	A	WD	5/A600	6/A600	–	2	–	PRE-HUNG STAINED
D BTH	BATHROOM	3'-0"	6'-8"	1 3/8"	2	OAK	A	WD	5/A600	6/A600	–	2	–	PRE-HUNG STAINED
D C	CLOSET	2'-4"	6'-8"	1 3/8"	2	OAK	A	WD	5/A600	6/A600	–	3	–	PRE-HUNG STAINED
D L	LAUNDRY	(2'-4"x2) 4'-8"	6'-8"	1 3/8"	2	OAK	A	WD	5/A600	6/A600	–	4	–	PRE-HUNG STAINED

STATE OF OHIO JOSEPH A. BODKIN 3135567 REGISTERED ARCHITECT
Joseph A. Bodkin, License #3135567
Expiration Date: 12.31.2023

modelgroup
DEVELOPMENT • CONSTRUCTION • MANAGEMENT
1826 Race Street
Cincinnati, Ohio 45202
513.559.0048

Formica Building

Office/Apartments
Auditor Address: 115 E. 5th Street, Actual Address: 120 E. 4th Street
Cincinnati OH 45202

No.	Revisions	Date
1	ENG CHG #1	11.14.2022

Project: Formica Building
115 E 5th Street
Cincinnati, Ohio 45202
Sheet Title: Unit B ADA
Construction
Project No. 2022_259
Issue Date
Scale: As Noted
Drawn
Checked

A301 ADA

APPROVED
CIN BD
2022P03573
02/01/23
city of CINCINNATI BUILDINGS & INSPECTIONS

C:\Users\jbodkin\Dropbox\01_NBDG_Projects\205_Formica\From Ian_PHASE C\ADAs - Phase C - From Ian\03_Formica_A300 - Floors 3-10.dwg-A301 ADA - B ADA Plot Date/Time: Nov 15, 2022-7:59am - By: jbodkin

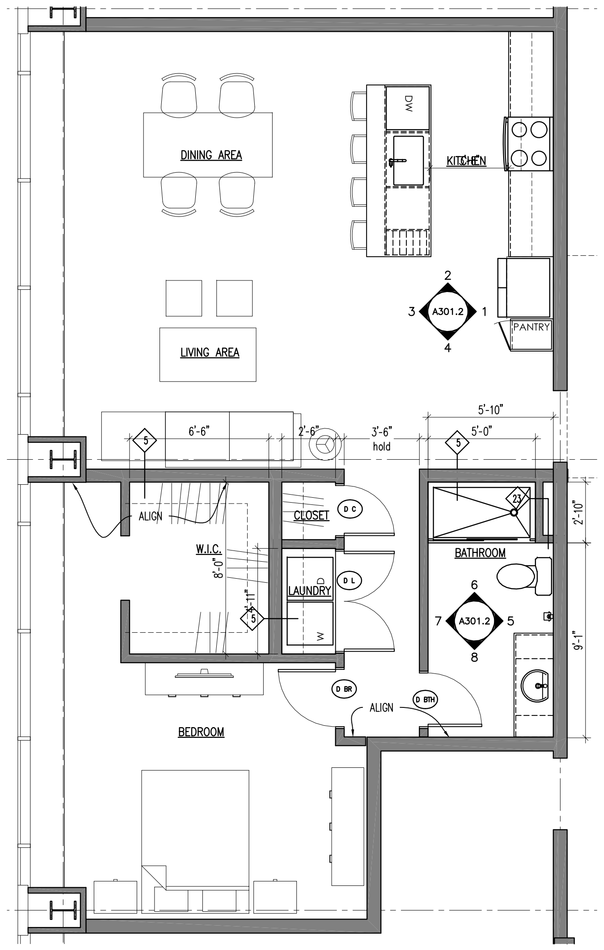

APARTMENT FLOOR PLAN
SCALE: 1/4" = 1'-0"
1 A301.2

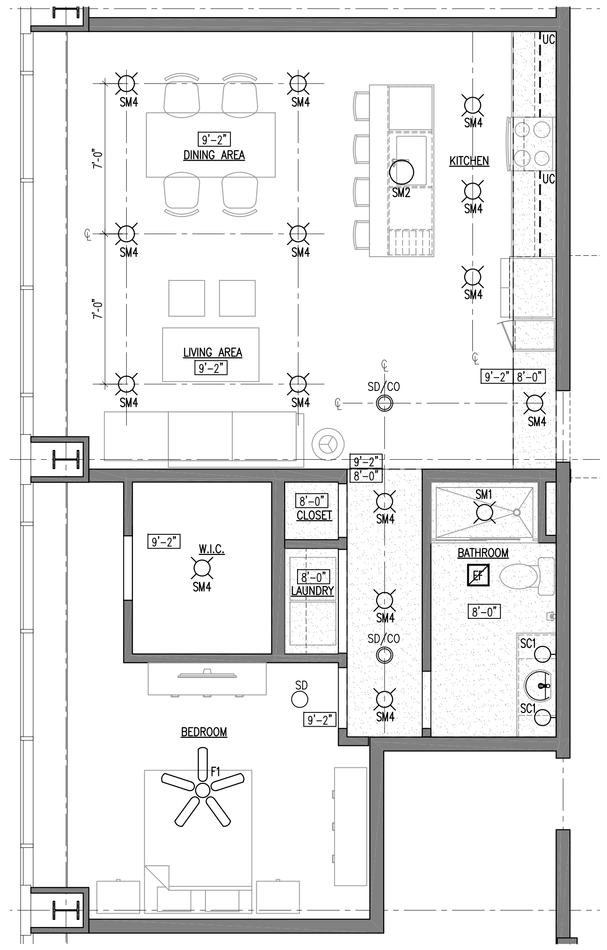

APARTMENT REFLECTED CEILING PLAN
SCALE: 1/4" = 1'-0"
2 A301.2

GENERAL APARTMENT NOTES

A. DOOR FRAME SHALL BE 4" FROM FACE OF WALL TO BACKSIDE OF FRAME U.N.O.
B. ALL NEW UNIT PARTITIONS ARE TYPE 3 U.N.O.
C. DIMENSIONS ARE FROM FINISH FACE OF WALL TO FINISH FACE OF WALL U.N.O.
D. CENTER ALL CLOSET DOORS ON CLOSETS U.N.O.
E. ALL LIGHTING FOR REFERENCE ONLY.
F. ALL CABINET DRAWINGS ARE FOR DESIGN INTENT ONLY. CABINET MAKER TO SUBMIT DETAILED SHOP DRAWINGS FOR REVIEW. BASIS OF DESIGN ARE SMART CABINETS
I. ALL VISIBLE SIDES OF CABINETS ARE TO RECEIVE A FINISHED PANEL THAT MATCHES THE CABINETS. THIS INCLUDES CABINETS THAT ARE UP AGAINST THE RADIATORS AND/OR FACING THE WINDOWS. TYP OF ALL.
J. ALL APPLIANCES IN THE APARTMENT UNITS WILL BE NEW ENERGY STAR APPLIANCES.
K. PROVIDE BLOCKING FOR FUTURE GRAB BARS IN ALL UNIT BATHROOMS.
L. ALL PANTRY AND LINEN CLOSETS TO RECEIVE FIVE (5) ADJUSTABLE MELAMINE SHELVES.
M. ALL CLOSETS TO RECEIVE ONE (1) MELAMINE SHELF AND COAT ROD. U.N.O.
N. EACH SHOWER TO BE PROVIDED W/ GLASS SHOWER DOOR.
O. PROVIDE AND INSTALL IN EACH APARTMENT (2) TOWEL BARS, (1) TOILET PAPER HOLDER, (1) ROBE HOOK.

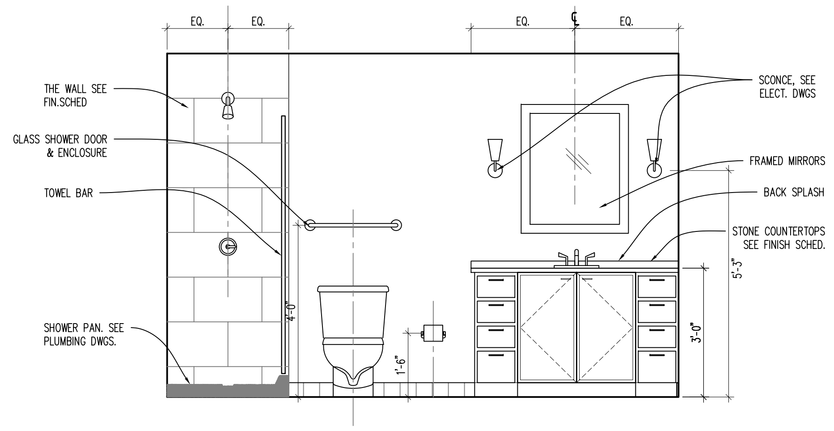

ELEVATION
SCALE: 1/2" = 1'-0"
5 A301.2

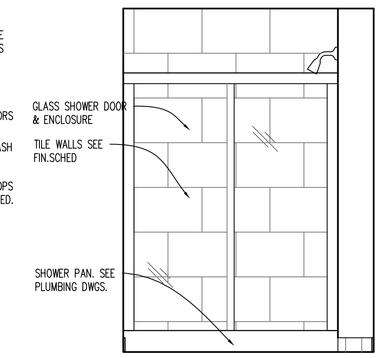

ELEVATION
SCALE: 1/2" = 1'-0"
6 A301.2

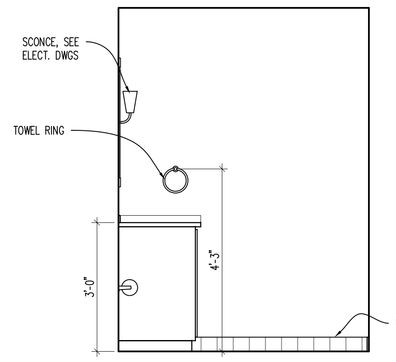

ELEVATION
SCALE: 1/2" = 1'-0"
7 A301.2

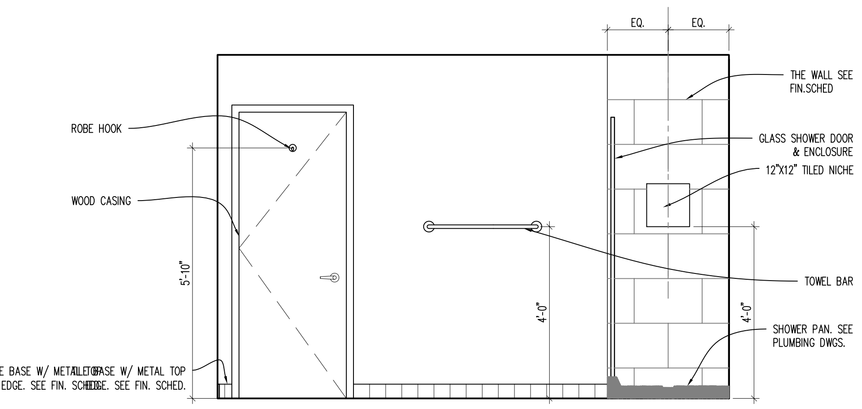

ELEVATION
SCALE: 1/2" = 1'-0"
8 A301.2

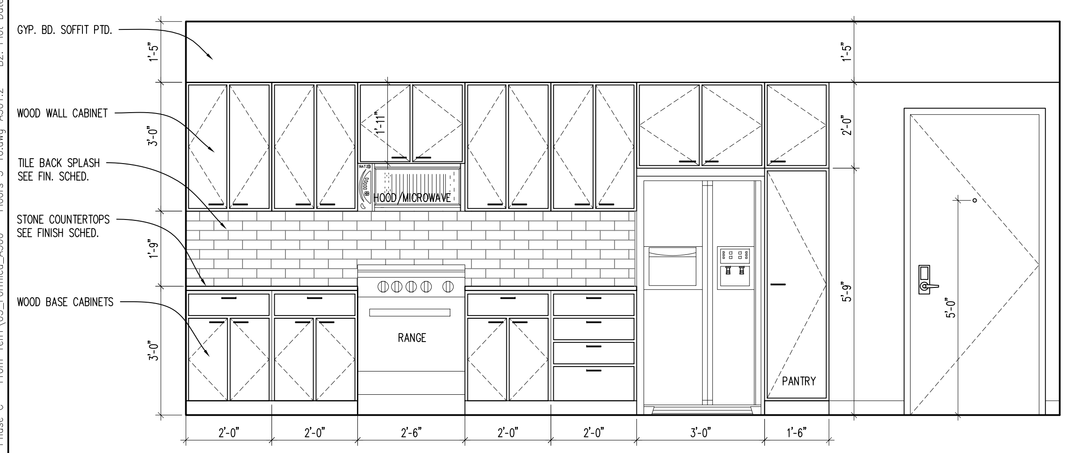

ELEVATION
SCALE: 1/2" = 1'-0"
1 A301.2

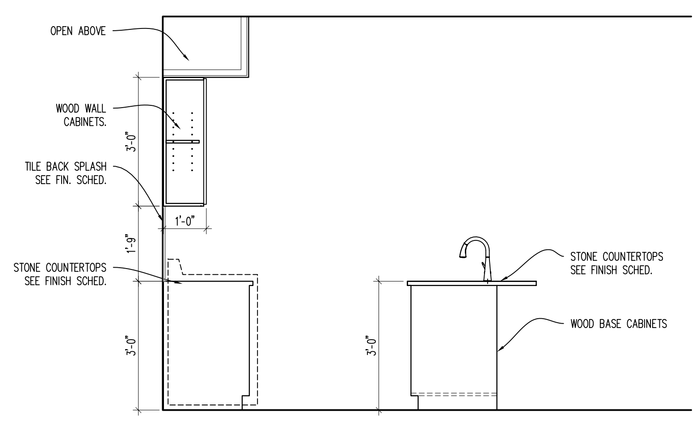

ELEVATION
SCALE: 1/2" = 1'-0"
2 A301.2

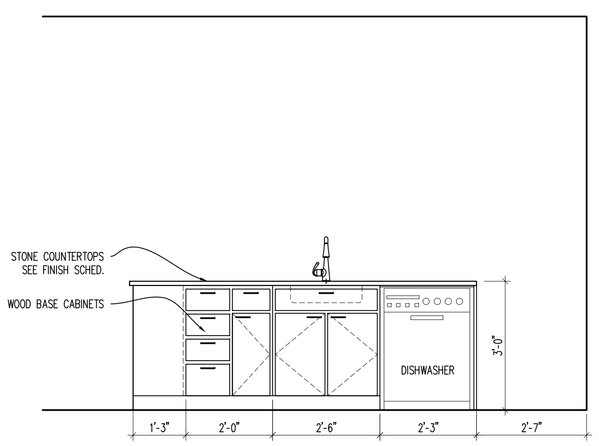

ELEVATION
SCALE: 1/2" = 1'-0"
3 A301.2

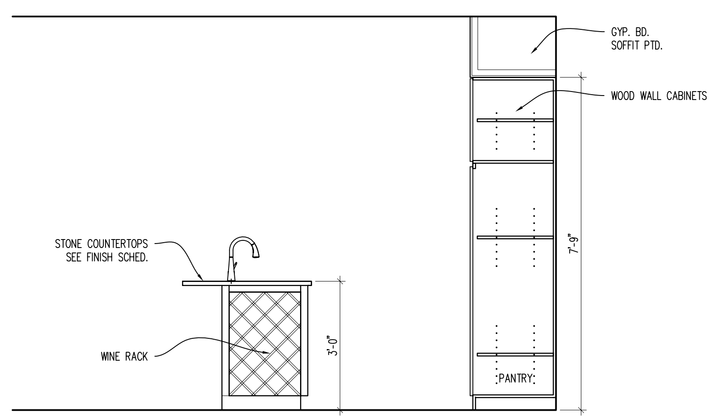

ELEVATION
SCALE: 1/2" = 1'-0"
4 A301.2

APARTMENT ROOM FINISH SCHEDULE

ROOM NAME	FLOOR	BASE	WALLS NORTH	WALLS SOUTH	WALLS EAST	WALLS WEST	CEILING	REMARKS	REV. NO.
LIVING AREA	VP-1	RB-3	PT-1	PT-1	PT-1	PT-1	PT-3	NOTES: A	
DINING AREA	VP-1	RB-3	PT-1	PT-1	PT-1	PT-1	PT-3	NOTES: A	
KITCHEN	VP-1	RB-3	PT-1	PT-1	PT-1	PT-1	PT-3	NOTES: A	
CLOSET	VP-1	RB-3	PT-1	PT-1	PT-1	PT-1	PT-3	NOTES: A	
LAUNDRY	VP-1	RB-3	PT-1	PT-1	PT-1	PT-1	PT-3	NOTES: A	
BEDROOM	VP-1	RB-3	PT-1	PT-1	PT-1	PT-1	PT-3	NOTES: A	
WALK-IN CLOSET	VP-1	RB-3	PT-1	PT-1	PT-1	PT-1	PT-3	NOTES: A	
BATHROOM	VP-1	RB-3	PT-1	PT-1	PT-1	PT-1	PT-3	NOTES: A	
FOYER / CORRIDOR	VP-1	RB-3	PT-1	PT-1	PT-1	PT-1	PT-3	NOTES: A	

NOTES:
A. ALL TRIM, CASINGS, DOORS, ETC ARE TO BE PAINTED. COLOR & SHEEN TBD.

APARTMENT DOOR SCHEDULE

DOOR MARK	DOOR LOCATION	DOOR INFORMATION SIZE WIDTH	HEIGHT	THICK	STYLE	DOOR MATERIAL	FRAME INFORMATION TYPE	FRAME MATERIAL	DETAIL HEAD	JAMB	OTHER	HDW. SET	FIRE RATING	REMARKS
D BR	BEDROOM	2'-8"	6'-8"	1 3/8"	2	OAK	A	WD	5/A600	6/A600	–	2	–	PRE-HUNG STAINED
D BTH	BATHROOM	2'-8"	6'-8"	1 3/8"	2	OAK	A	WD	5/A600	6/A600	–	2	–	PRE-HUNG STAINED
D C	CLOSET	2'-4"	6'-8"	1 3/8"	2	OAK	A	WD	5/A600	6/A600	–	3	–	PRE-HUNG STAINED
D L	LAUNDRY	(2'-4"x2) 4'-8"	6'-8"	1 3/8"	2	OAK	A	WD	5/A600	6/A600	–	4	–	PRE-HUNG STAINED

STATE OF OHIO JOSEPH A. BODKIN 513367 REGISTERED ARCHITECT
Joseph A. Bodkin, License #313367
Expiration Date: 12.31.2023

modelgroup
DEVELOPMENT • CONSTRUCTION • MANAGEMENT
1826 Race Street
Cincinnati, Ohio 45202
513.559.0048

Formica Building

Office/Apartments
Auditor Address: 115 E. 5th Street, Actual Address: 120 E. 4th Street
Cincinnati OH 45202

No.	Revisions	Date
2	ENG CHG #1	11.14.2022

Project: Formica Building
115 E. 5th Street
Cincinnati, Ohio 45202
Sheet Title: Unit B.2
Construction
Project #: 2022_259
Issue Date
Scale: As Noted
Drawn
Checked

A301.2

APPROVED
CIN BD
2022P03573
02/01/23
city of CINCINNATI BUILDINGS & INSPECTIONS

Plot Date/Time: Nov 15, 2022-8:00am - By: jbodkin

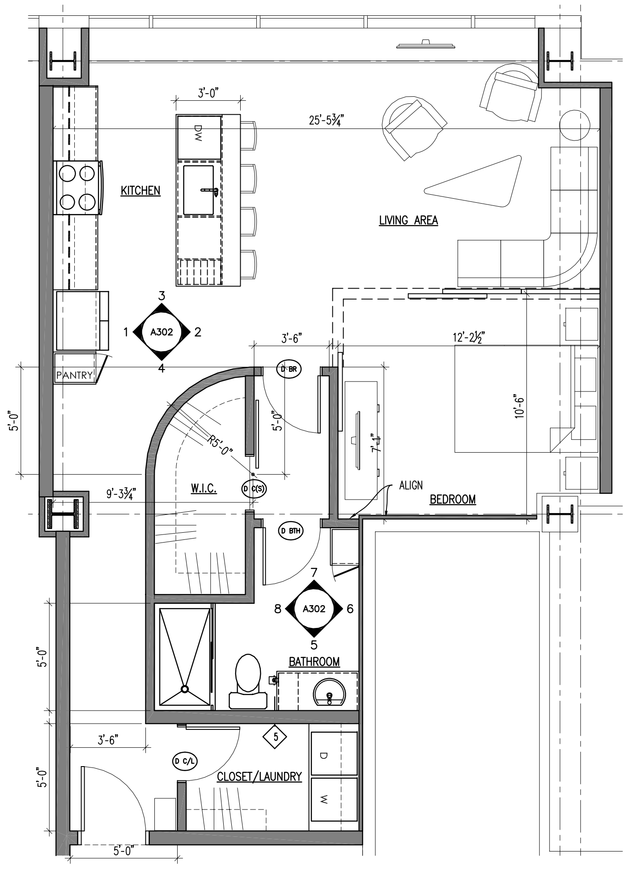

APARTMENT FLOOR PLAN
SCALE: 1/4" = 1'-0"
1 / A302

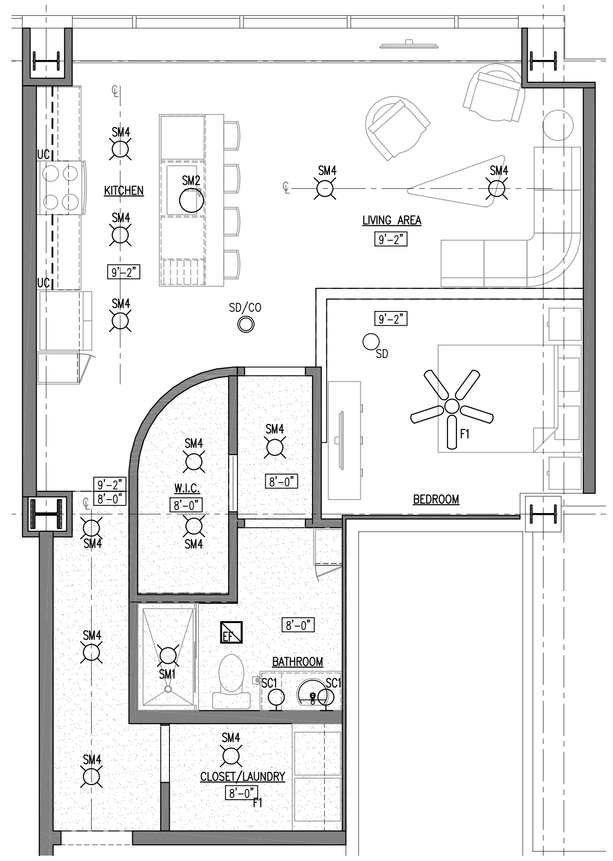

APARTMENT REFLECTED CEILING PLAN
SCALE: 1/4" = 1'-0"
2 / A302

GENERAL APARTMENT NOTES

A. DOOR FRAME SHALL BE 4" FROM FACE OF WALL TO BACKSIDE OF FRAME U.N.O.
B. ALL NEW UNIT PARTITIONS ARE TYPE 3 U.N.O.
C. DIMENSIONS ARE FROM FINISH FACE OF WALL TO FINISH FACE OF WALL U.N.O.
D. CENTER ALL CLOSET DOORS ON CLOSETS U.N.O.
E. ALL LIGHTING FOR REFERENCE ONLY.
F. ALL CABINET DRAWINGS ARE FOR DESIGN INTENT ONLY. CABINET MAKER TO SUBMIT DETAILED SHOP DRAWINGS FOR REVIEW. BASIS OF DESIGN ARE SMART CABINETS
I. ALL VISIBLE SIDES OF CABINETS ARE TO RECEIVE A FINISHED PANEL THAT MATCHES THE CABINETS. THIS INCLUDES CABINETS THAT ARE UP AGAINST THE RADIATORS AND/OR FACING THE WINDOWS. TYP OF ALL.
J. ALL APPLIANCES IN THE APARTMENT UNITS WILL BE NEW ENERGY STAR APPLIANCES.
K. PROVIDE BLOCKING FOR FUTURE GRAB BARS IN ALL UNIT BATHROOMS.
L. ALL PANTRY AND LINEN CLOSETS TO RECEIVE FIVE (5) ADJUSTABLE MELAMINE SHELVES.
M. ALL CLOSETS TO RECEIVE ONE (1) MELAMINE SHELF AND COAT ROD. U.N.O.
N. EACH SHOWER TO BE PROVIDED W/ GLASS SHOWER DOOR.
O. PROVIDE AND INSTALL IN EACH APARTMENT (2) TOWEL BARS, (1) TOILET PAPER HOLDER, (1) ROBE HOOK.

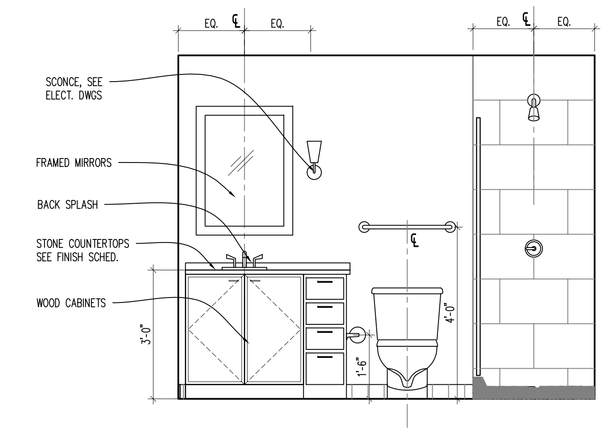

ELEVATION
SCALE: 1/2" = 1'-0"
5 / A302

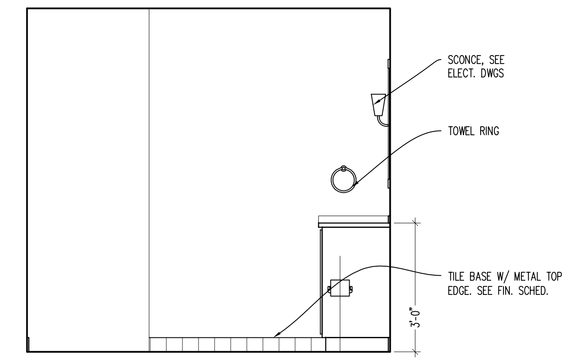

ELEVATION
SCALE: 1/2" = 1'-0"
6 / A302

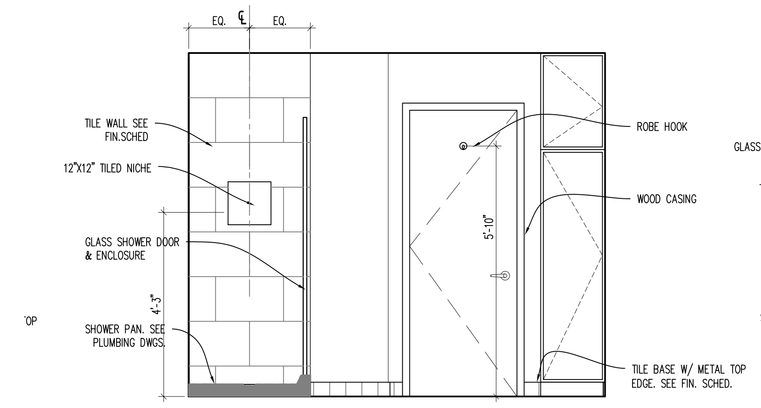

ELEVATION
SCALE: 1/2" = 1'-0"
7 / A302

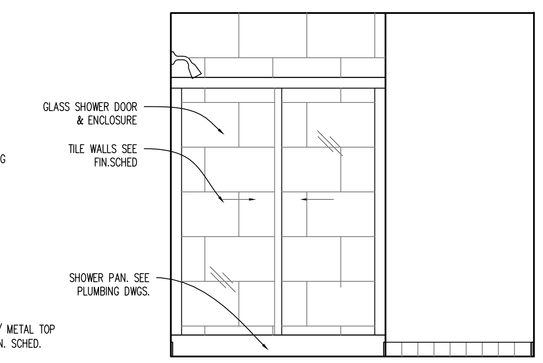

ELEVATION
SCALE: 1/2" = 1'-0"
8 / A302

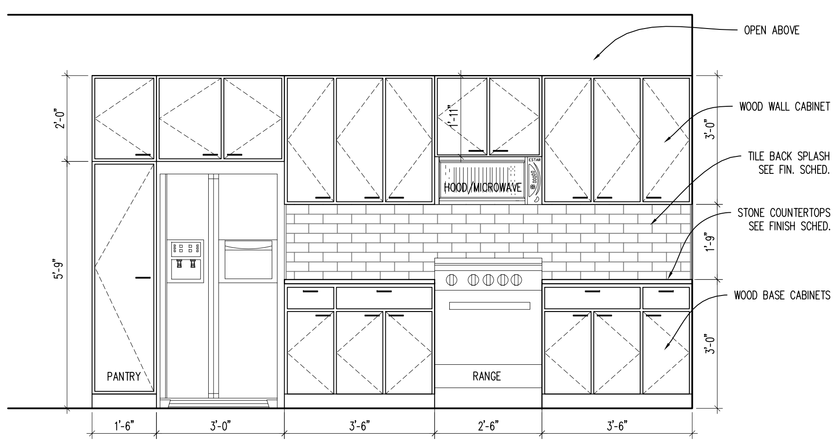

ELEVATION
SCALE: 1/2" = 1'-0"
1 / A302

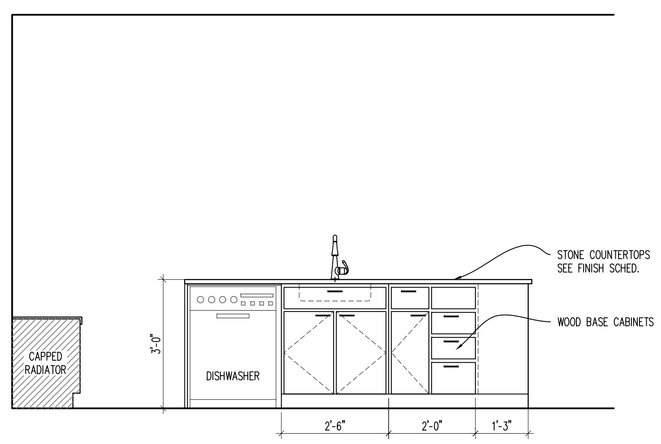

ELEVATION
SCALE: 1/2" = 1'-0"
2 / A302

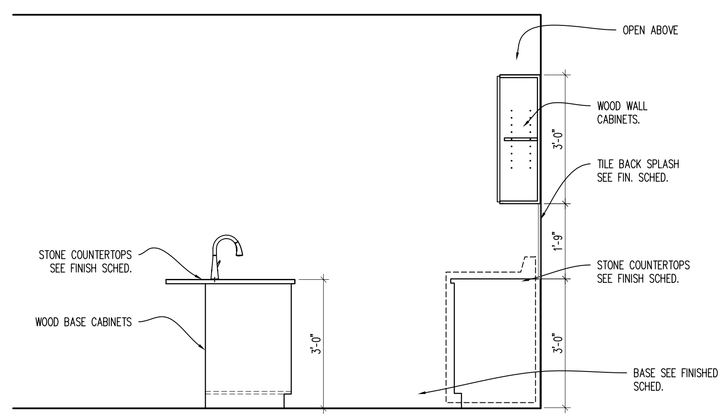

ELEVATION
SCALE: 1/2" = 1'-0"
3 / A302

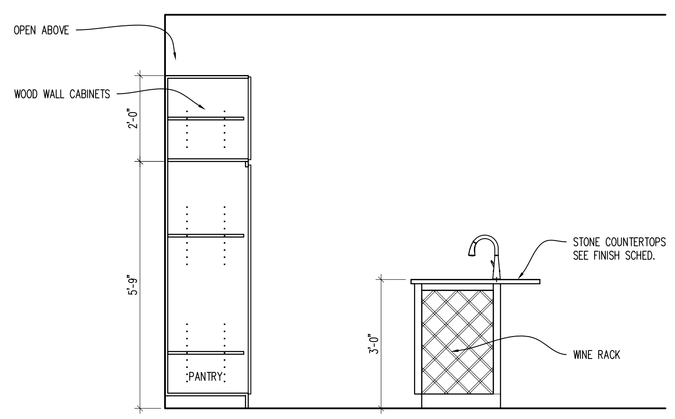

ELEVATION
SCALE: 1/2" = 1'-0"
4 / A302

APARTMENT ROOM FINISH SCHEDULE

ROOM NAME	FLOOR	BASE	WALLS NORTH	WALLS SOUTH	WALLS EAST	WALLS WEST	CEILING	REMARKS	REV. NO.
LIVING AREA	VP-1	RB-3	PT-1	PT-1	PT-1	PT-1	PT-3	NOTES: A	
KITCHEN	VP-1	RB-3	PT-1	PT-1	PT-1	PT-1	PT-3	NOTES: A	
BEDROOM	VP-1	RB-3	PT-1	PT-1	PT-1	PT-1	PT-3	NOTES: A	
CORRIDOR	VP-1	RB-3	PT-1	PT-1	PT-1	PT-1	PT-3	NOTES: A	
WALK-IN CLOSET	VP-1	RB-3	PT-1	PT-1	PT-1	PT-1	PT-3	NOTES: A	
BATHROOM	VP-1	RB-3	PT-1	PT-1	PT-1	PT-1	PT-3	NOTES: A	
CLOSET / LAUNDRY	VP-1	RB-3	PT-1	PT-1	PT-1	PT-1	PT-3	NOTES: A	
FOYER / CORRIDOR	VP-1	RB-3	PT-1	PT-1	PT-1	PT-1	PT-3	NOTES: A	

NOTES:
A. ALL TRIM, CASINGS, DOORS, ETC ARE TO BE PAINTED. COLOR & SHEEN TBD.

APARTMENT DOOR SCHEDULE

DOOR MARK	DOOR LOCATION	DOOR INFORMATION SIZE WIDTH	HEIGHT	THICK	STYLE	DOOR MATERIAL	FRAME INFORMATION TYPE	FRAME MATERIAL	DETAIL HEAD	JAMB	OTHER	HDW. SET	FIRE RATING	REMARKS
D BR	CORRIDOR	2'-8"	6'-8"	1 3/8"	2	OAK	A	WD	5/A600	6/A600	–	3	–	PRE-HUNG STAINED
D BTH	BATHROOM	2'-8"	6'-8"	1 3/8"	2	OAK	A	WD	5/A600	6/A600	–	2	–	PRE-HUNG STAINED
D C(S)	WALK-IN CLOSET	2'-6" (sliding)	6'-8"	1 3/8"	3	OAK	A	WD	5/A600	6/A600	–	3	–	PRE-HUNG STAINED
D C/L	CLOSET / LAUNDRY	2'-6"	6'-8"	1 3/8"	2	OAK	A	WD	5/A600	6/A600	–	3	–	PRE-HUNG STAINED

STATE OF OHIO
JOSEPH A. BODKIN
3153567
REGISTERED ARCHITECT
Joseph A. Bodkin, License #3153567
Expiration Date: 12.31.2023

modelgroup
DEVELOPMENT • CONSTRUCTION • MANAGEMENT
1826 Race Street
Cincinnati, Ohio 45202
513.559.0048

Formica Building

Office/Apartments
Auditor Address: 115 E. 5th Street, Actual Address: 120 E. 4th Street
Cincinnati OH 45202

No.	Revisions	Date
1	ENG CHG #1	11.14.2022

Project: Formica Building
115 E 5th Street
Cincinnati, Ohio 45202
Sheet Title: Unit C
Construction
Project #: 2022_259
Issue Date
Scale: As Noted
Drawn
Checked

A302

APPROVED
CIN BD
2022P03573
02/01/23
city of CINCINNATI
BUILDINGS & INSPECTIONS

C:\Users\jbodkin\Dropbox\01_NeBG_Projects\205_Formica\From Ian_PHASE C\CADs - Phase C - From Ian\03_Formica_A300 - Floors 3-10.dwg-A302 - C. Plot Date/Time: Nov 15, 2022-8:02am - By: jbodkin

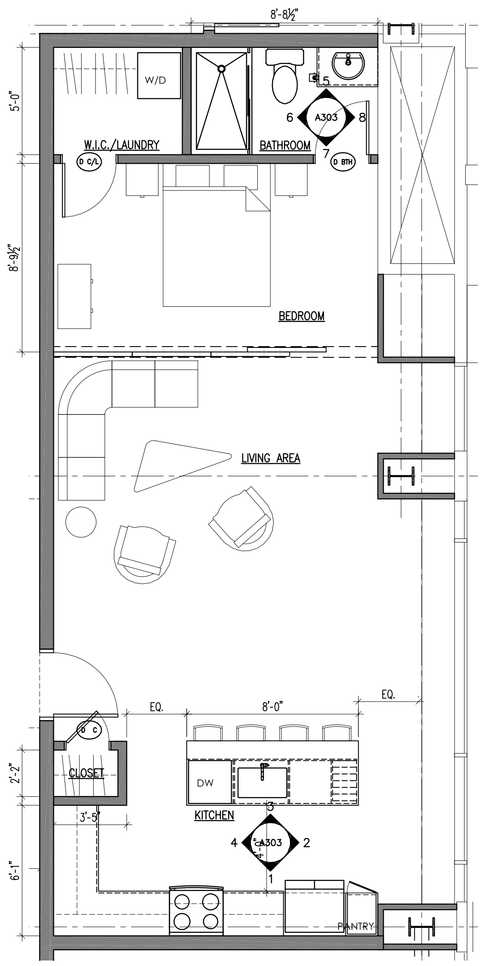

APARTMENT FLOOR PLAN (1 / A303)
SCALE: 1/4" = 1'-0"

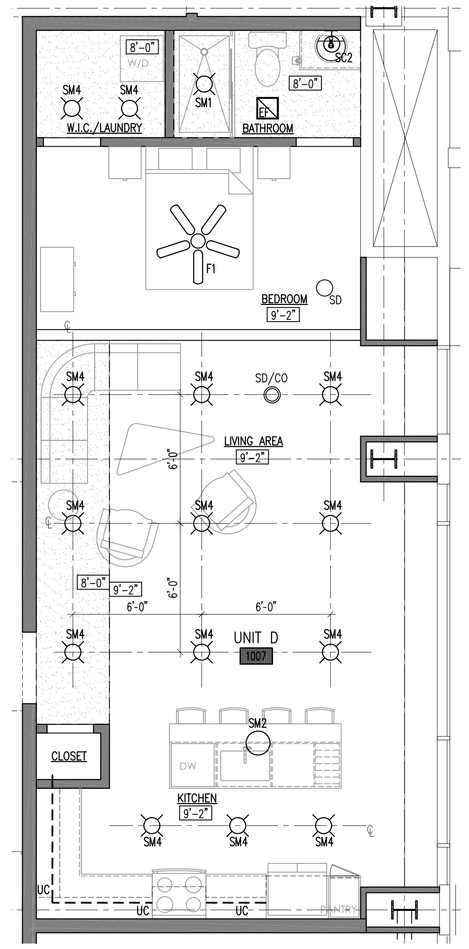

APARTMENT REFLECTED CEILING PLAN (2 / A303)
SCALE: 1/4" = 1'-0"

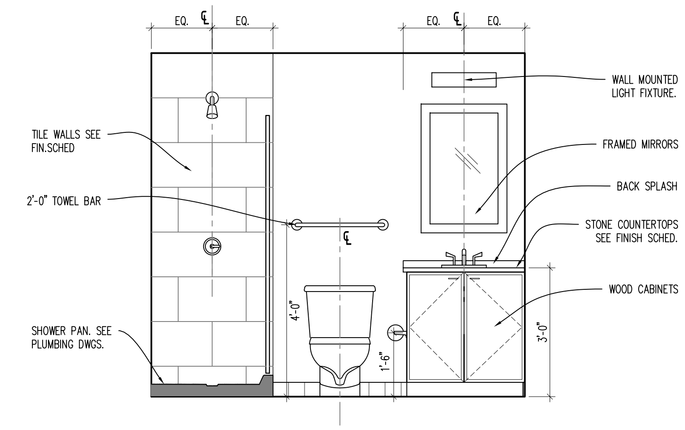

ELEVATION (5 / A303)
SCALE: 1/2" = 1'-0"

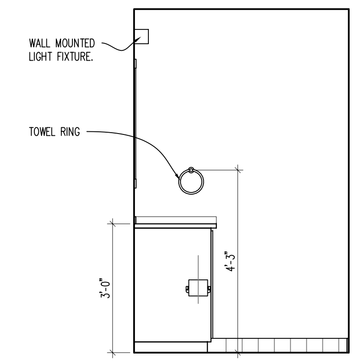

ELEVATION (6 / A303)
SCALE: 1/2" = 1'-0"

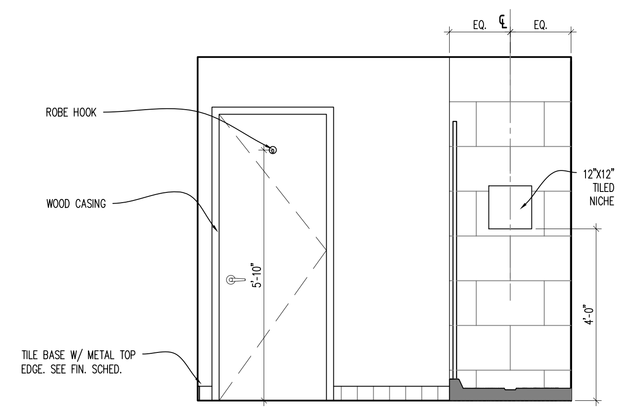

ELEVATION (7 / A303)
SCALE: 1/2" = 1'-0"

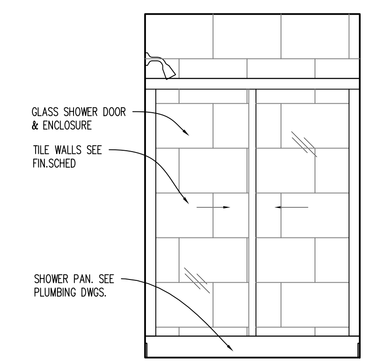

ELEVATION (8 / A303)
SCALE: 1/2" = 1'-0"

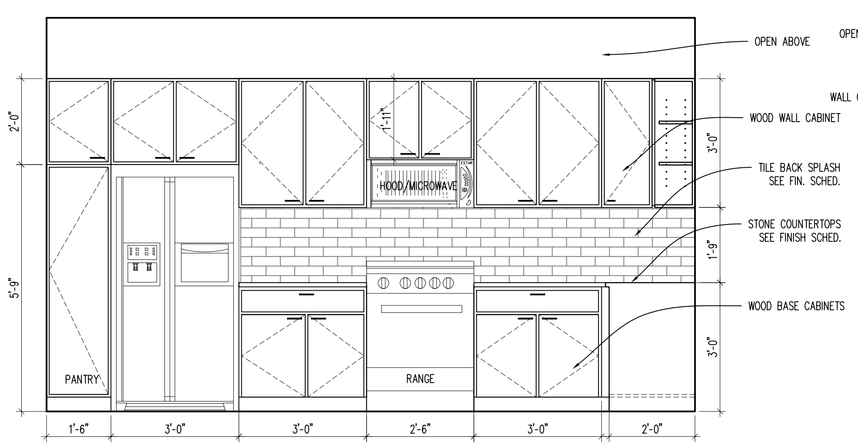

ELEVATION (1 / A303)
SCALE: 1/2" = 1'-0"

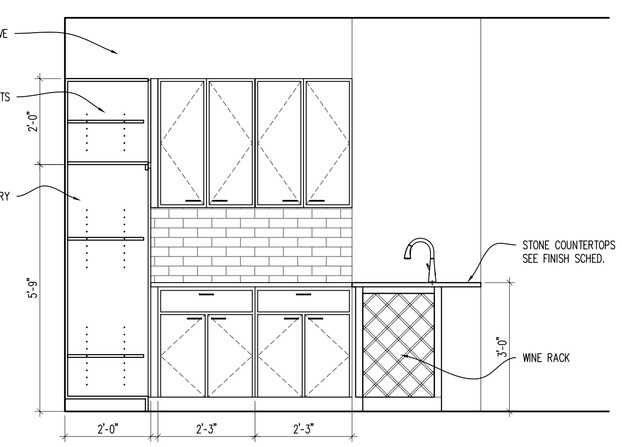

ELEVATION (2 / A303)
SCALE: 1/2" = 1'-0"

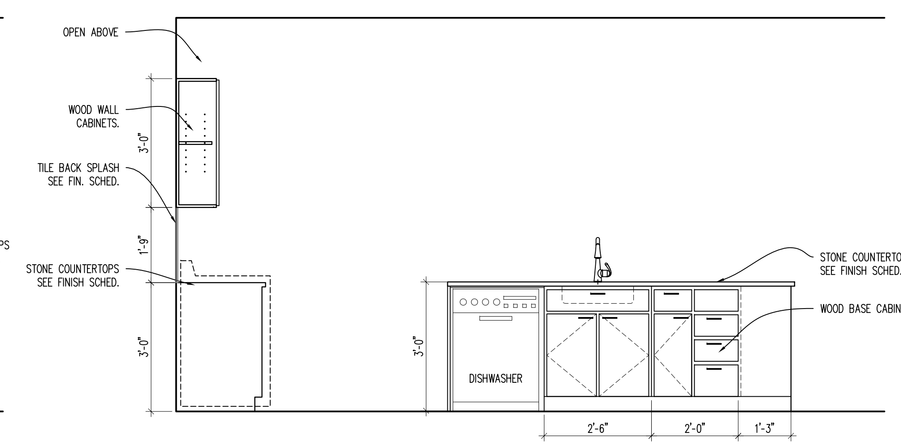

ELEVATION (3 / A303)
SCALE: 1/2" = 1'-0"

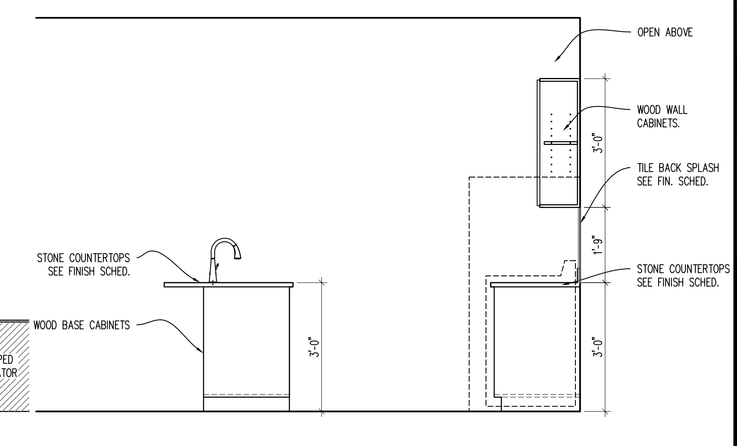

ELEVATION (4 / A303)
SCALE: 1/2" = 1'-0"

APARTMENT ROOM FINISH SCHEDULE

ROOM NAME	FLOOR	BASE	WALLS NORTH	WALLS SOUTH	WALLS EAST	WALLS WEST	CEILING	REMARKS	REV. NO.
LIVING AREA	VP-1	RB-3	PT-1	PT-1	PT-1	PT-1	PT-3	NOTES: A	
KITCHEN	VP-1	RB-3	PT-1	PT-1	PT-1	PT-1	PT-3	NOTES: A	
CLOSET	VP-1	RB-3	PT-1	PT-1	PT-1	PT-1	PT-3	NOTES: A	
BEDROOM	VP-1	RB-3	PT-1	PT-1	PT-1	PT-1	PT-3	NOTES: A	
BATHROOM	VP-1	RB-3	PT-1	PT-1	PT-1	PT-1	PT-3	NOTES: A	
CLOSET / LAUNDRY	VP-1	RB-3	PT-1	PT-1	PT-1	PT-1	PT-3	NOTES: A	

NOTES:
A ALL TRIM, CASINGS, DOORS, ETC ARE TO BE PAINTED. COLOR & SHEEN TBD.

APARTMENT DOOR SCHEDULE

DOOR MARK	DOOR LOCATION	DOOR INFORMATION SIZE WIDTH	HEIGHT	THICK	STYLE	DOOR MATERIAL	FRAME INFORMATION TYPE	FRAME MATERIAL	DETAIL HEAD	JAMB	OTHER	HDW. SET	FIRE RATING	REMARKS
D BTH	BATHROOM	2'-8"	6'-8"	1 3/8"	2	OAK	A	WD	5/A600	6/A600	–	2	–	PRE-HUNG STAINED
D C	CLOSET	2'-0"	6'-8"	1 3/8"	2	OAK	A	WD	5/A600	6/A600	–	3	–	PRE-HUNG STAINED
D C/L	CLOSET / LAUNDRY	2'-6"	6'-8"	1 3/8"	2	OAK	A	WD	5/A600	6/A600	–	3	–	PRE-HUNG STAINED

GENERAL APARTMENT NOTES

A. DOOR FRAME SHALL BE 4" FROM FACE OF WALL TO BACKSIDE OF FRAME U.N.O.
B. ALL NEW UNIT PARTITIONS ARE TYPE 3 U.N.O.
C. DIMENSIONS ARE FROM FINISH FACE OF WALL TO FINISH FACE OF WALL U.N.O.
D. CENTER ALL CLOSET DOORS ON CLOSETS U.N.O.
E. ALL LIGHTING FOR REFERENCE ONLY.
F. ALL CABINET DRAWINGS ARE FOR DESIGN INTENT ONLY. CABINET MAKER TO SUBMIT DETAILED SHOP DRAWINGS FOR REVIEW. BASIS OF DESIGN ARE SMART CABINETS
I. ALL VISIBLE SIDES OF CABINETS ARE TO RECEIVE A FINISHED PANEL THAT MATCHES THE CABINETS. THIS INCLUDES CABINETS THAT ARE UP AGAINST THE RADIATORS AND/OR FACING THE WINDOWS. TYP OF ALL.
J. ALL APPLIANCES IN THE APARTMENT UNITS WILL BE NEW ENERGY STAR APPLIANCES.
K. PROVIDE BLOCKING FOR FUTURE GRAB BARS IN ALL UNIT BATHROOMS.
L. ALL PANTRY AND LINEN CLOSETS TO RECEIVE FIVE (5) ADJUSTABLE MELAMINE SHELVES.
M. ALL CLOSETS TO RECEIVE ONE (1) MELAMINE SHELF AND COAT ROD. U.N.O.
N. EACH SHOWER TO BE PROVIDED W/ GLASS SHOWER DOOR.
O. PROVIDE AND INSTALL IN EACH APARTMENT (2) TOWEL BARS, (1) TOILET PAPER HOLDER, (1) ROBE HOOK.

STATE OF OHIO JOSEPH A. BODKIN 3153567 REGISTERED ARCHITECT
Joseph A. Bodkin, License #3153567
Expiration Date: 12.31.2023

modelgroup
DEVELOPMENT • CONSTRUCTION • MANAGEMENT
1826 Race Street
Cincinnati, Ohio 45202
513.559.0048

Formica Building
Office/Apartments
Auditor Address: 115 E. 5th Street, Actual Address: 120 E. 4th Street
Cincinnati OH 45202

No.	Revisions	Date
2	ENG CHG #1	11.14.2022

Project: Formica Building
115 E 5th Street
Cincinnati, Ohio 45202
Sheet Title: Unit D
Construction
Issue Date
Project #: 2022_259
Scale: As Noted
Drawn
Checked

A303

APPROVED
CIN BD
2022P03573
02/01/23
city of CINCINNATI BUILDINGS & INSPECTIONS

C:\Users\jbodkin\Dropbox\01_NBG_Projects\01_Formica Building\From Ian\1_PHASE C\CADs - Phase C - From Ian\03_Formica_A303 - Floors 3-10.dwg-A303 - D. Plot Date/Time: Nov 15, 2022-8:04am - By: jbodkin

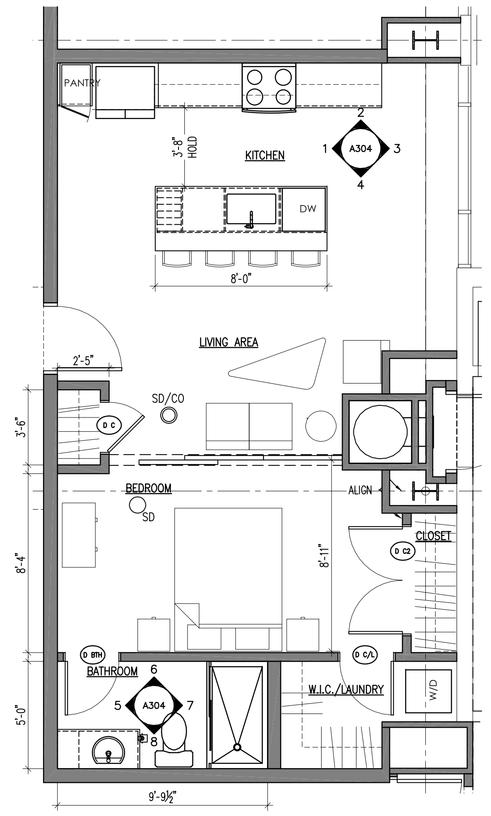

APARTMENT FLOOR PLAN
SCALE: 1/4" = 1'-0" (1 A304)

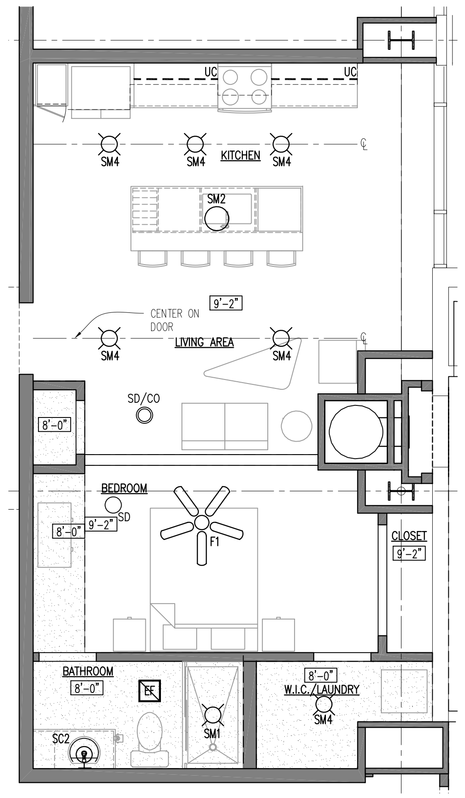

APARTMENT REFLECTED CEILING PLAN
SCALE: 1/4" = 1'-0" (2 A304)

GENERAL APARTMENT NOTES

A. DOOR FRAME SHALL BE 4" FROM FACE OF WALL TO BACKSIDE OF FRAME U.N.O.
B. ALL NEW UNIT PARTITIONS ARE TYPE 3 U.N.O.
C. DIMENSIONS ARE FROM FINISH FACE OF WALL TO FINISH FACE OF WALL U.N.O.
D. CENTER ALL CLOSET DOORS ON CLOSETS U.N.O.
E. ALL LIGHTING FOR REFERENCE ONLY.
F. ALL CABINET DRAWINGS ARE FOR DESIGN INTENT ONLY. CABINET MAKER TO SUBMIT DETAILED SHOP DRAWINGS FOR REVIEW. BASIS OF DESIGN ARE SMART CABINETS.
I. ALL VISIBLE SIDES OF CABINETS ARE TO RECEIVE A FINISHED PANEL THAT MATCHES THE CABINETS. THIS INCLUDES CABINETS THAT ARE UP AGAINST THE RADIATORS AND/OR FACING THE WINDOWS. TYP OF ALL.
J. ALL APPLIANCES IN THE APARTMENT UNITS WILL BE NEW ENERGY STAR APPLIANCES.
K. PROVIDE BLOCKING FOR FUTURE GRAB BARS IN ALL UNIT BATHROOMS.
L. ALL PANTRY AND LINEN CLOSETS TO RECEIVE FIVE (5) ADJUSTABLE MELAMINE SHELVES.
M. ALL CLOSETS TO RECEIVE ONE (1) MELAMINE SHELF AND COAT ROD. U.N.O.
N. EACH SHOWER TO BE PROVIDED W/ GLASS SHOWER DOOR.
O. PROVIDE AND INSTALL IN EACH APARTMENT (2) TOWEL BARS, (1) TOILET PAPER HOLDER, (1) ROBE HOOK.

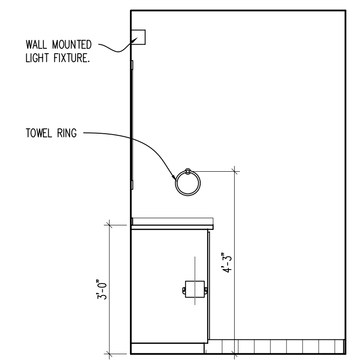

ELEVATION
SCALE: 1/2" = 1'-0" (5 A304)

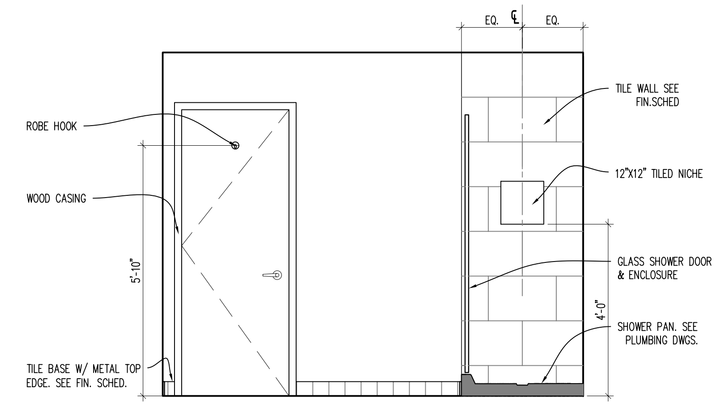

ELEVATION
SCALE: 1/2" = 1'-0" (6 A304)

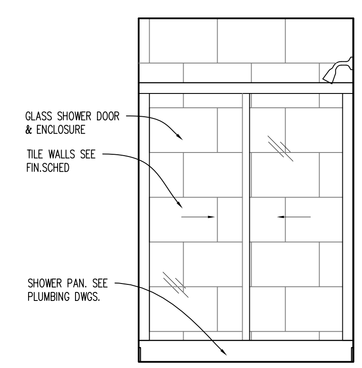

ELEVATION
SCALE: 1/2" = 1'-0" (7 A304)

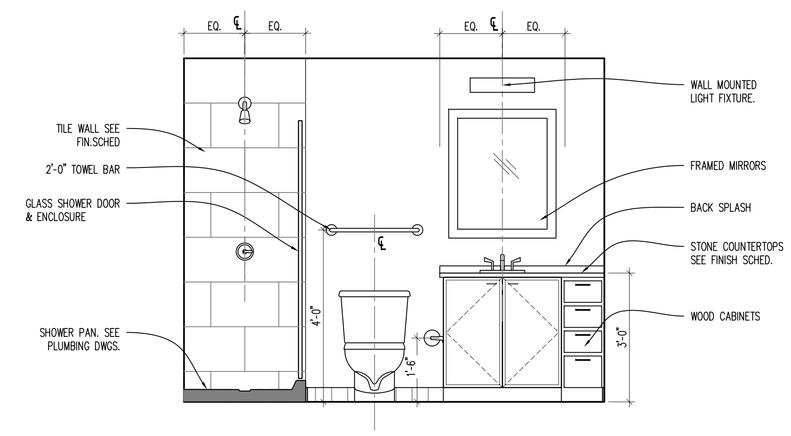

ELEVATION
SCALE: 1/2" = 1'-0" (8 A304)

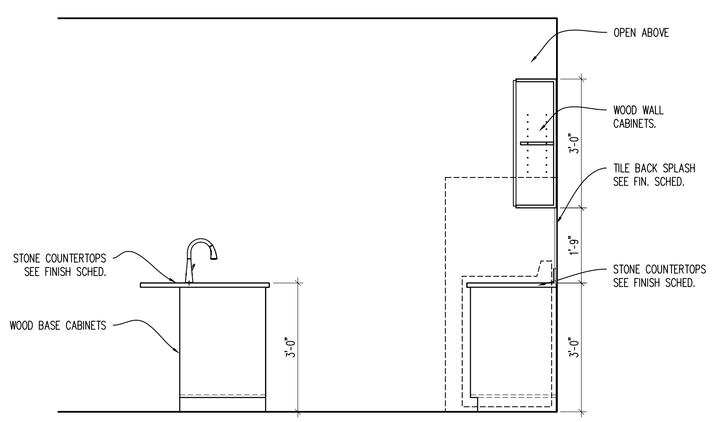

ELEVATION
SCALE: 1/2" = 1'-0" (1 A304)

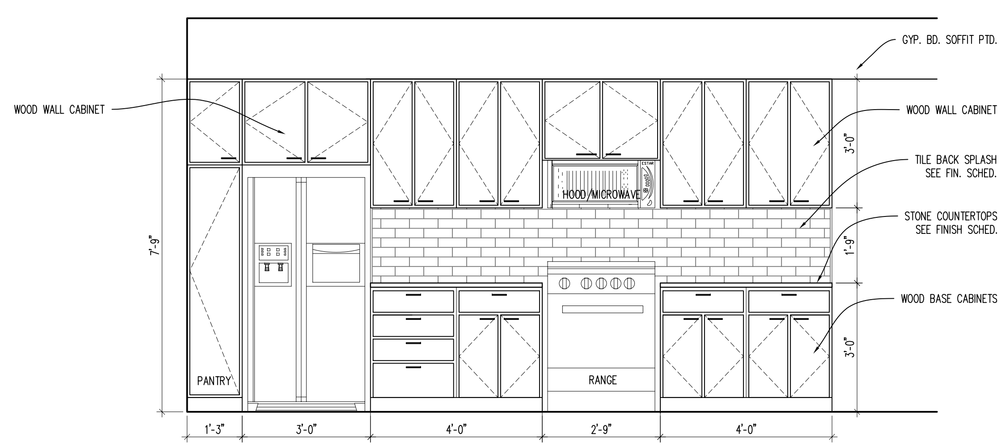

ELEVATION
SCALE: 1/2" = 1'-0" (2 A304)

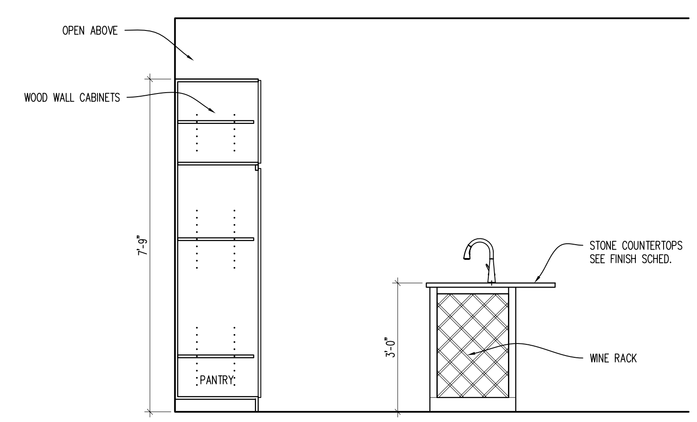

ELEVATION
SCALE: 1/2" = 1'-0" (3 A304)

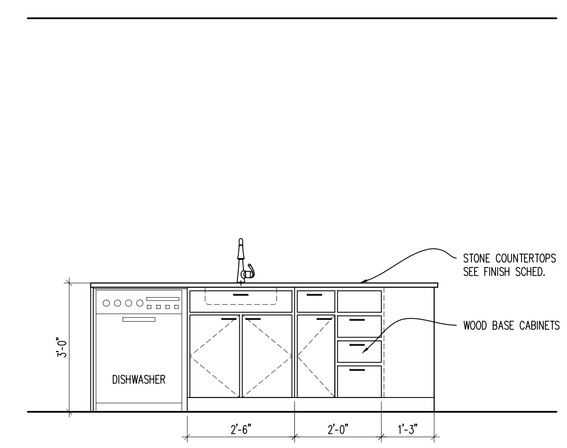

ELEVATION
SCALE: 1/2" = 1'-0" (4 A304)

APARTMENT ROOM FINISH SCHEDULE

ROOM NAME	FLOOR	BASE	WALLS NORTH	WALLS SOUTH	WALLS EAST	WALLS WEST	CEILING	REMARKS	REV. NO.
LIVING AREA	VP-1	RB-3	PT-1	PT-1	PT-1	PT-1	PT-3	NOTES: A	
KITCHEN	VP-1	RB-3	PT-1	PT-1	PT-1	PT-1	PT-3	NOTES: A	
CLOSET	VP-1	RB-3	PT-1	PT-1	PT-1	PT-1	PT-3	NOTES: A	
BEDROOM	VP-1	RB-3	PT-1	PT-1	PT-1	PT-1	PT-3	NOTES: A	
BATHROOM	VP-1	RB-3	PT-1	PT-1	PT-1	PT-1	PT-3	NOTES: A	
CLOSET / LAUNDRY	VP-1	RB-3	PT-1	PT-1	PT-1	PT-1	PT-3	NOTES: A	

NOTES:
A. ALL TRIM, CASINGS, DOORS, ETC ARE TO BE PAINTED. COLOR & SHEEN TBD.

APARTMENT DOOR SCHEDULE

DOOR MARK	DOOR LOCATION	DOOR INFORMATION SIZE WIDTH	HEIGHT	THICK	STYLE	DOOR MATERIAL	FRAME INFORMATION TYPE	FRAME MATERIAL	DETAIL HEAD	JAMB	OTHER	HDW. SET	FIRE RATING	REMARKS
D BTH	BATHROOM	2'-8"	6'-8"	1 3/8"	2	OAK	A	WD	5/A600	6/A600	–	2	–	PRE-HUNG STAINED
D C	CLOSET	2'-4"	6'-8"	1 3/8"	2	OAK	A	WD	5/A600	6/A600	–	3	–	PRE-HUNG STAINED
D C/L	CLOSET / LAUNDRY	2'-6"	6'-8"	1 3/8"	2	OAK	A	WD	5/A600	6/A600	–	3	–	PRE-HUNG STAINED
D C	CLOSET	(2'-6"x2) 5'-0"	6'-8"	1 3/8"	2	OAK	A	WD	5/A600	6/A600	–	3	–	PRE-HUNG STAINED

STATE OF OHIO JOSEPH BODKIN 313367 REGISTERED ARCHITECT
Joseph A. Bodkin, License #313367
Expiration Date: 12.31.2023

modelgroup
DEVELOPMENT • CONSTRUCTION • MANAGEMENT
1826 Race Street
Cincinnati, Ohio 45202
513.559.0048

Formica Building
Office/Apartments
Auditor Address: 115 E. 5th Street, Actual Address: 120 E. 4th Street
Cincinnati OH 45202

No.	Revisions	Date
1	ENG CHG #1	11.14.2022

Project: Formica Building
115 E 5th Street
Cincinnati, Ohio 45202
Sheet Title: Unit E
Construction
Project #: 2022_259
Issue Date
Scale: AS Noted
Drawn
Checked

A304

APPROVED
CIN BD
2022P03573
02/01/23
city of CINCINNATI BUILDINGS & INSPECTIONS

C:\Users\jbodkin\Dropbox\01_NBDC_Projects\2022\From Teri_PHASE C\CADs - Phase C - From Teri\03_Formica_A300 - Floors 3-10.dwg-A304 - E Plot Date/Time: Nov 15, 2022-8:50am - By: jbodkin

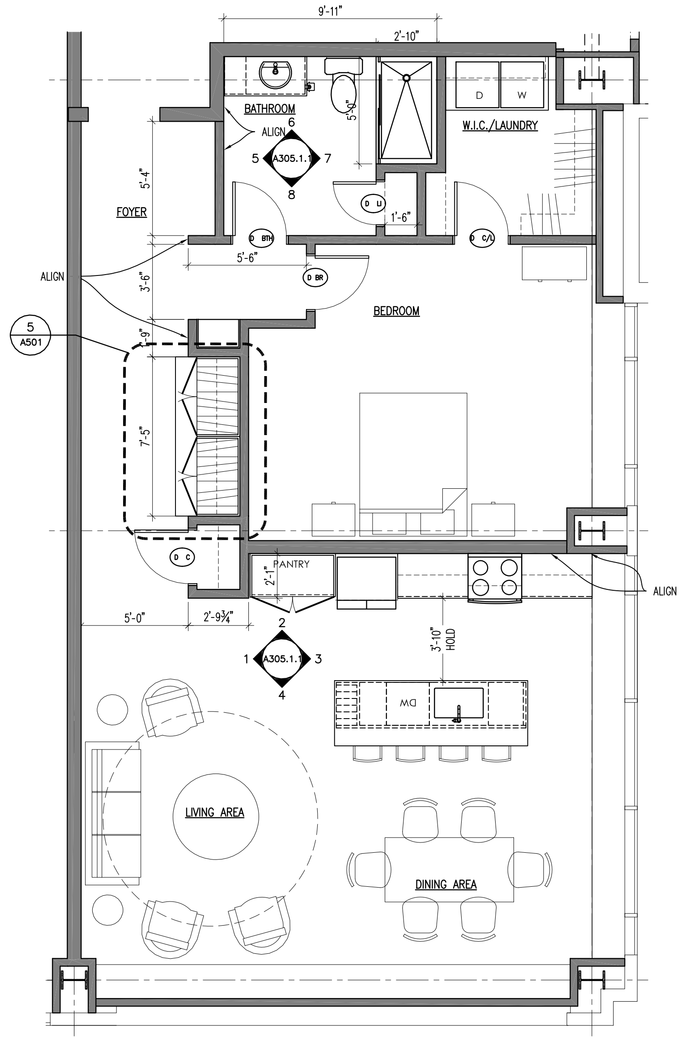

APARTMENT FLOOR PLAN
SCALE: 1/4" = 1'-0" (1 / A305.1)

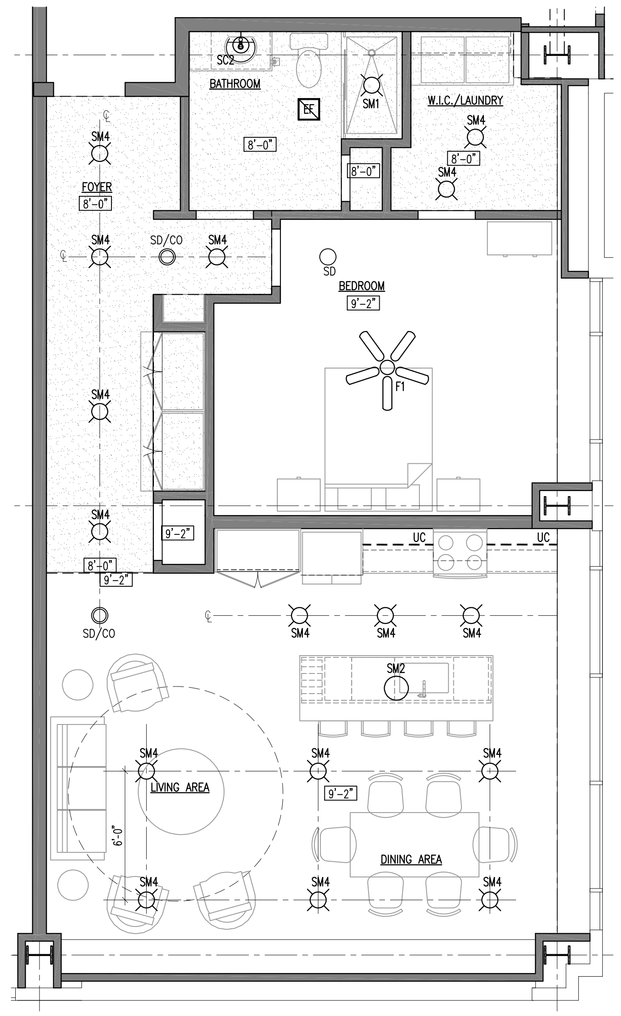

APARTMENT REFLECTED CEILING PLAN
SCALE: 1/4" = 1'-0" (2 / A305.1)

GENERAL APARTMENT NOTES

A. DOOR FRAME SHALL BE 4" FROM FACE OF WALL TO BACKSIDE OF FRAME U.N.O.
B. ALL NEW UNIT PARTITIONS ARE TYPE 3 U.N.O.
C. DIMENSIONS ARE FROM FINISH FACE OF WALL TO FINISH FACE OF WALL U.N.O.
D. CENTER ALL CLOSET DOORS ON CLOSETS U.N.O.
E. ALL LIGHTING FOR REFERENCE ONLY.
F. ALL CABINET DRAWINGS ARE FOR DESIGN INTENT ONLY. CABINET MAKER TO SUBMIT DETAILED SHOP DRAWINGS FOR REVIEW. BASIS OF DESIGN ARE SMART CABINETS
I. ALL VISIBLE SIDES OF CABINETS ARE TO RECEIVE A FINISHED PANEL THAT MATCHES THE CABINETS. THIS INCLUDES CABINETS THAT ARE UP AGAINST THE RADIATORS AND/OR FACING THE WINDOWS. TYP OF ALL.
J. ALL APPLIANCES IN THE APARTMENT UNITS WILL BE NEW ENERGY STAR APPLIANCES.
K. PROVIDE BLOCKING FOR FUTURE GRAB BARS IN ALL UNIT BATHROOMS.
L. ALL PANTRY AND LINEN CLOSETS TO RECEIVE FIVE (5) ADJUSTABLE MELAMINE SHELVES.
M. ALL CLOSETS TO RECEIVE ONE (1) MELAMINE SHELF AND COAT ROD. U.N.O.
N. EACH SHOWER TO BE PROVIDED W/ GLASS SHOWER DOOR.
O. PROVIDE AND INSTALL IN EACH APARTMENT (2) TOWEL BARS, (1) TOILET PAPER HOLDER, (1) ROBE HOOK.

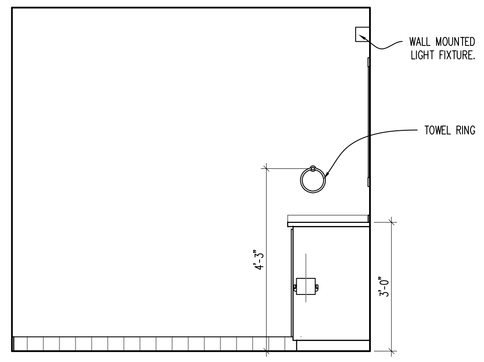

ELEVATION
SCALE: 1/2" = 1'-0" (5 / A305.1)

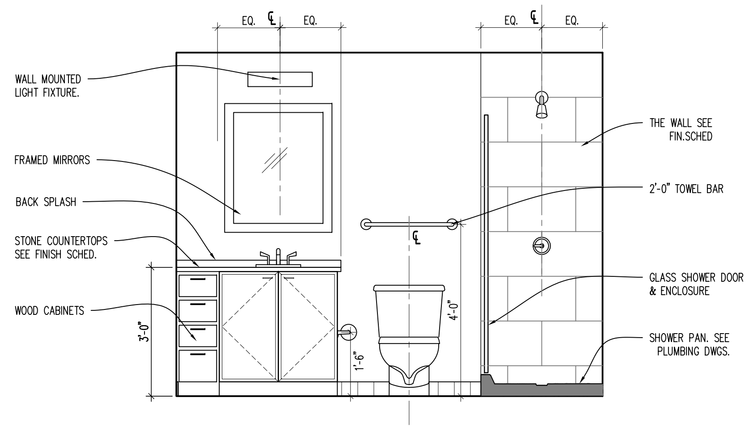

ELEVATION
SCALE: 1/2" = 1'-0" (6 / A305.1)

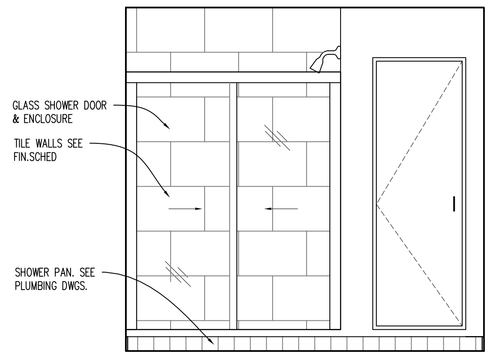

ELEVATION
SCALE: 1/2" = 1'-0" (7 / A305.1)

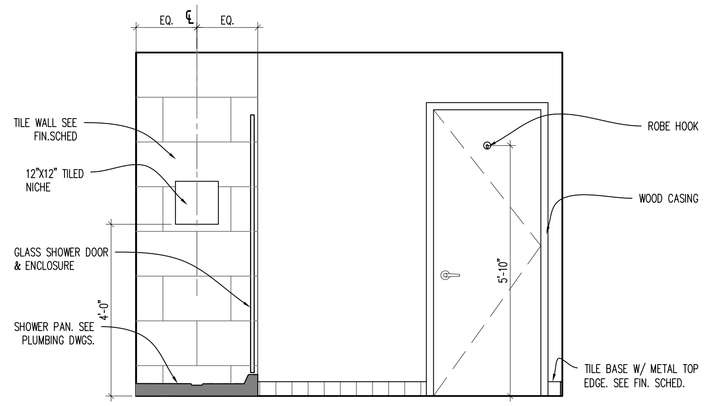

ELEVATION
SCALE: 1/2" = 1'-0" (8 / A305.1)

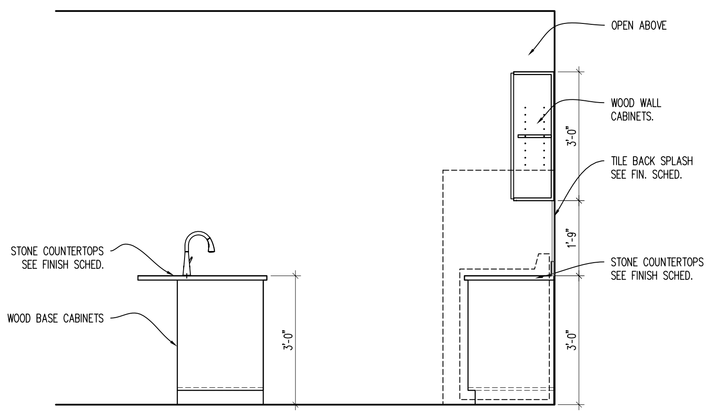

ELEVATION
SCALE: 1/2" = 1'-0" (1 / A305.1)

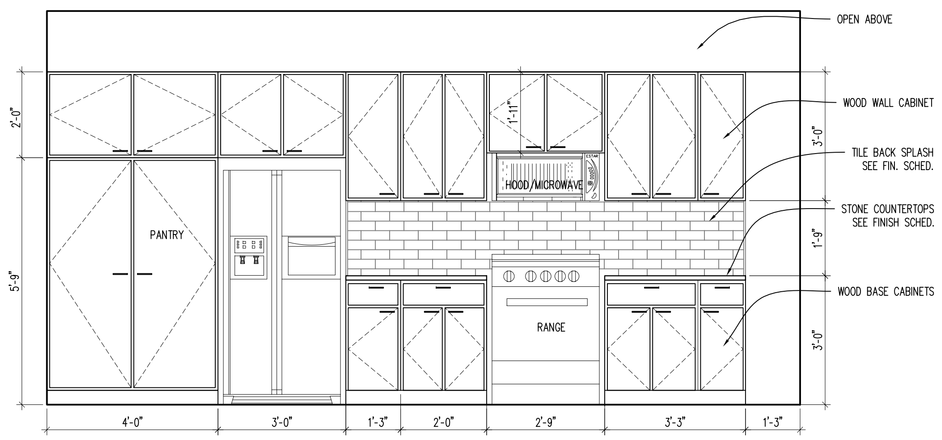

ELEVATION
SCALE: 1/2" = 1'-0" (2 / A305.1)

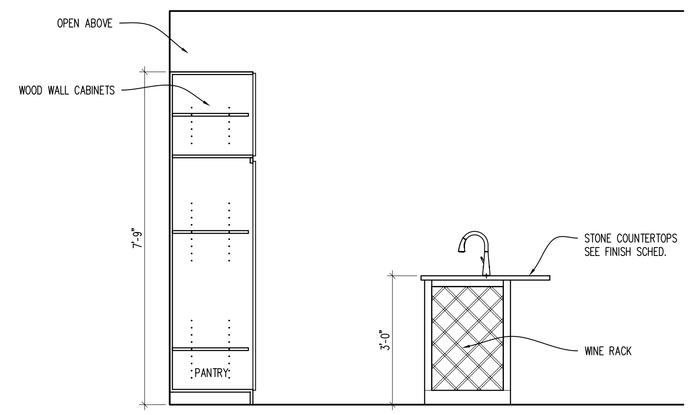

ELEVATION
SCALE: 1/2" = 1'-0" (3 / A305.1)

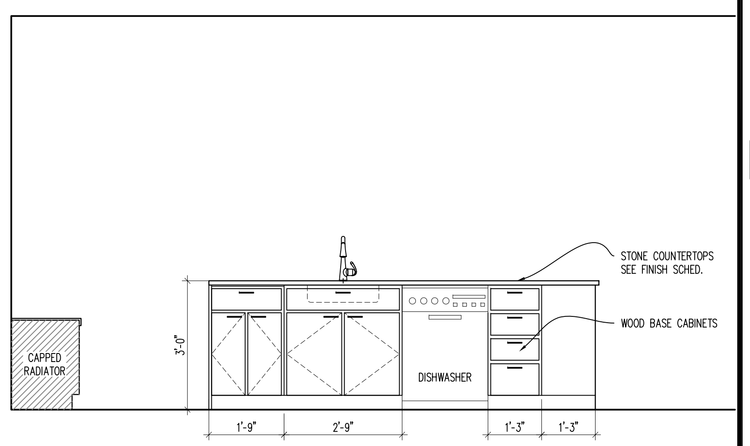

ELEVATION
SCALE: 1/2" = 1'-0" (4 / A305.1)

APARTMENT ROOM FINISH SCHEDULE

ROOM NAME	FLOOR	BASE	WALLS NORTH	WALLS SOUTH	WALLS EAST	WALLS WEST	CEILING	REMARKS	REV. NO.
LIVING AREA	VP-1	RB-3	PT-1	PT-1	PT-1	PT-1	PT-3	NOTES: A	
DINING AREA	VP-1	RB-3	PT-1	PT-1	PT-1	PT-1	PT-3	NOTES: A	
KITCHEN	VP-1	RB-3	PT-1	PT-1	PT-1	PT-1	PT-3	NOTES: A	
CLOSET	VP-1	RB-3	PT-1	PT-1	PT-1	PT-1	PT-3	NOTES: A	
BEDROOM	VP-1	RB-3	PT-1	PT-1	PT-1	PT-1	PT-3	NOTES: A	
WALK-IN CLOSET / LAUNDRY	VP-1	RB-3	PT-1	PT-1	PT-1	PT-1	PT-3	NOTES: A	
LINEN	VP-1	RB-3	PT-1	PT-1	PT-1	PT-1	PT-3	NOTES: A	
BATHROOM	VP-1	RB-3	PT-1	PT-1	PT-1	PT-1	PT-3	NOTES: A	
FOYER / CORRIDOR	VP-1	RB-3	PT-1	PT-1	PT-1	PT-1	PT-3	NOTES: A	

NOTES:
A. ALL TRIM, CASINGS, DOORS, ETC ARE TO BE PAINTED. COLOR & SHEEN TBD.

APARTMENT DOOR SCHEDULE

DOOR MARK	DOOR LOCATION	DOOR INFORMATION SIZE WIDTH	HEIGHT	THICK	STYLE	DOOR MATERIAL	FRAME INFORMATION TYPE	FRAME MATERIAL	DETAIL HEAD	JAMB	OTHER	HDW. SET	FIRE RATING	REMARKS
D BR	BEDROOM	2'-8"	6'-8"	1 3/8"	2	OAK	A	WD	5/A600	6/A600	–	2	–	PRE-HUNG STAINED
D BTH	BATHROOM	2'-8"	6'-8"	1 3/8"	2	OAK	A	WD	5/A600	6/A600	–	2	–	PRE-HUNG STAINED
D C	CLOSET / LAUNDRY	2'-6"	6'-8"	1 3/8"	2	OAK	A	WD	5/A600	6/A600	–	3	–	PRE-HUNG STAINED
D C	CLOSET	2'-6"	6'-8"	1 3/8"	2	OAK	A	WD	5/A600	6/A600	–	3	–	PRE-HUNG STAINED
D LI	LINEN	2'-0"	6'-8"	1 3/8"	2	OAK	A	WD	5/A600	6/A600	–	3	–	PRE-HUNG STAINED

STATE OF OHIO JOSEPH A. BODKIN 3153567 REGISTERED ARCHITECT
Joseph A. Bodkin, License #3153567
Expiration Date: 12.31.2023

modelgroup
DEVELOPMENT • CONSTRUCTION • MANAGEMENT
1826 Race Street
Cincinnati, Ohio 45202
513.559.0048

Formica Building

Office/Apartments

Auditor Address: 115 E. 5th Street, Actual Address: 120 E. 4th Street
Cincinnati OH 45202

No.	Revisions	Date
1	ENG CHG #1	11.14.2022

Project: Formica Building
115 E 5th Street
Cincinnati, Ohio 45202
Sheet Title: Unit F Construction
Issue Date
Project #: 2022_259
Drawn
Scale: As Noted
Checked

A305.1

APPROVED
CIN BD
2022P03573
02/01/23
city of CINCINNATI BUILDINGS & INSPECTIONS
C:\Users\jbodkin\Dropbox\01_MODO_Projects\02_Formica\1_PHASE C\CAD\a - Phase C - From 1st\03_Formica_A300 - Floors 3-10.dwg-A305.1 - F. Plot Date/Time: Nov. 15, 2022-8:06am - By: jbodkin

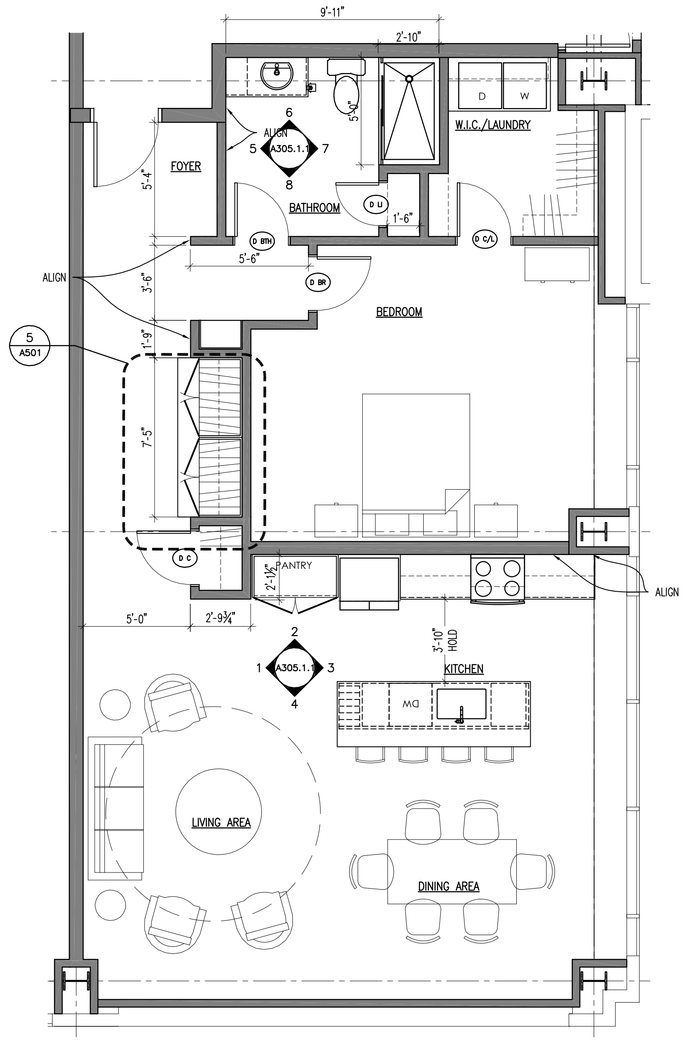

APARTMENT FLOOR PLAN
SCALE: 1/4" = 1'-0" (1 / A305.2)

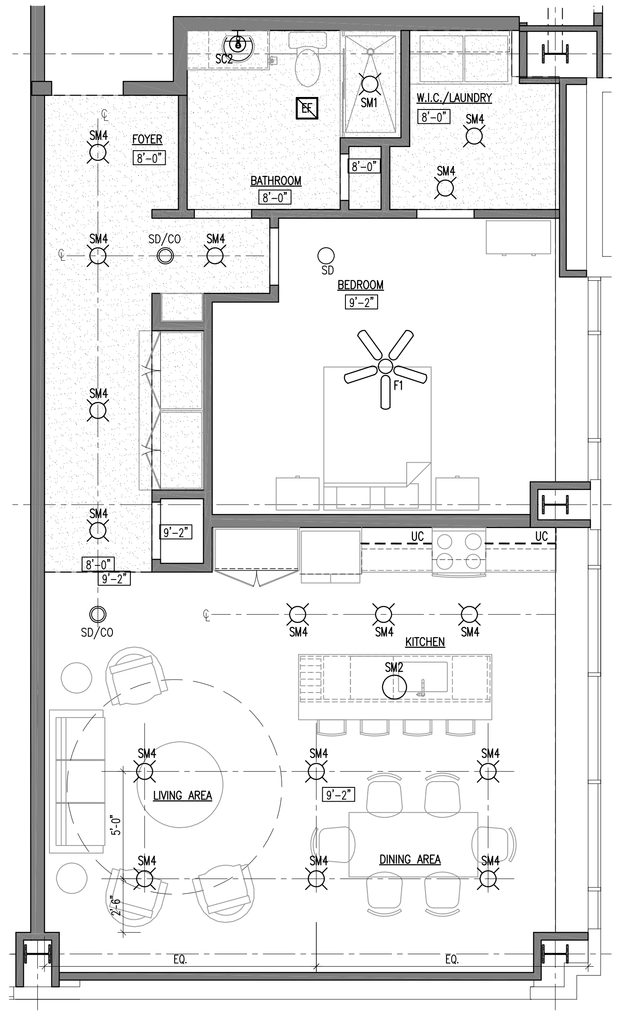

APARTMENT REFLECTED CEILING PLAN
SCALE: 1/4" = 1'-0" (2 / A305.2)

GENERAL APARTMENT NOTES

A. DOOR FRAME SHALL BE 4" FROM FACE OF WALL TO BACKSIDE OF FRAME U.N.O.
B. ALL NEW UNIT PARTITIONS ARE TYPE 3 U.N.O.
C. DIMENSIONS ARE FROM FINISH FACE OF WALL TO FINISH FACE OF WALL U.N.O.
D. CENTER ALL CLOSET DOORS ON CLOSETS U.N.O.
E. ALL LIGHTING FOR REFERENCE ONLY.
F. ALL CABINET DRAWINGS ARE FOR DESIGN INTENT ONLY. CABINET MAKER TO SUBMIT DETAILED SHOP DRAWINGS FOR REVIEW. BASIS OF DESIGN ARE SMART CABINETS
I. ALL VISIBLE SIDES OF CABINETS ARE TO RECEIVE A FINISHED PANEL THAT MATCHES THE CABINETS. THIS INCLUDES CABINETS THAT ARE UP AGAINST THE RADIATORS AND/OR FACING THE WINDOWS. TYP OF ALL.
J. ALL APPLIANCES IN THE APARTMENT UNITS WILL BE NEW ENERGY STAR APPLIANCES.
K. PROVIDE BLOCKING FOR FUTURE GRAB BARS IN ALL UNIT BATHROOMS.
L. ALL PANTRY AND LINEN CLOSETS TO RECEIVE FIVE (5) ADJUSTABLE MELAMINE SHELVES.
M. ALL CLOSETS TO RECEIVE ONE (1) MELAMINE SHELF AND COAT ROD. U.N.O.
N. EACH SHOWER TO BE PROVIDED W/ GLASS SHOWER DOOR.
O. PROVIDE AND INSTALL IN EACH APARTMENT (2) TOWEL BARS, (1) TOILET PAPER HOLDER, (1) ROBE HOOK.

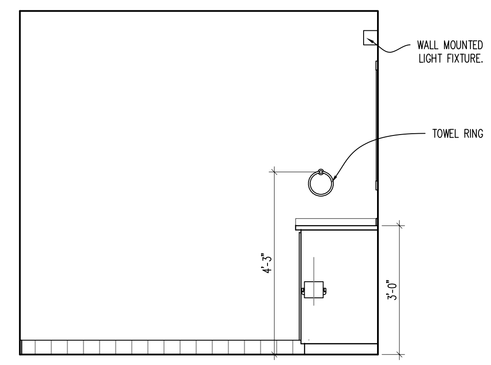

ELEVATION
SCALE: 1/2" = 1'-0" (5 / A305.2)

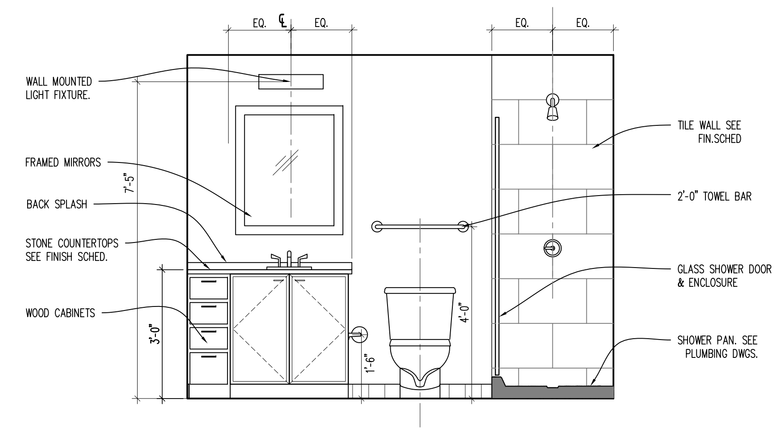

ELEVATION
SCALE: 1/2" = 1'-0" (6 / A305.2)

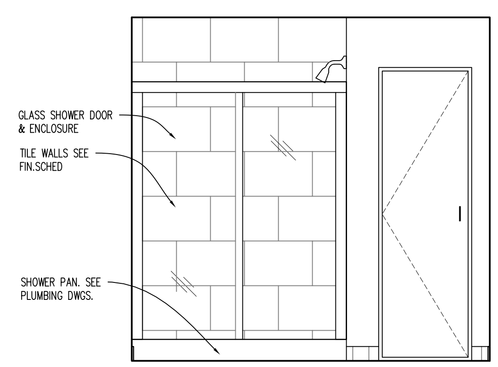

ELEVATION
SCALE: 1/2" = 1'-0" (7 / A305.2)

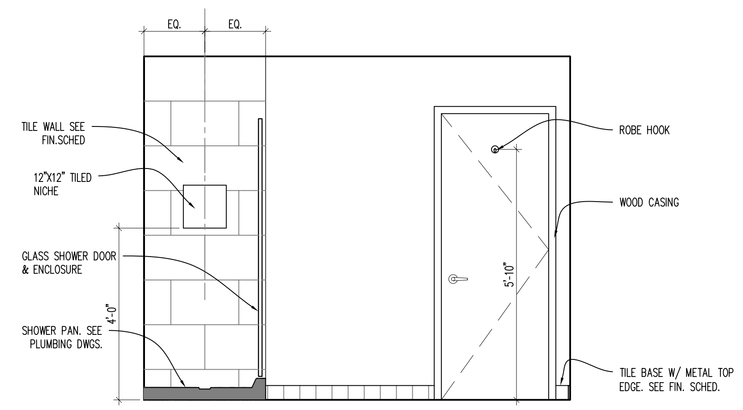

ELEVATION
SCALE: 1/2" = 1'-0" (8 / A305.2)

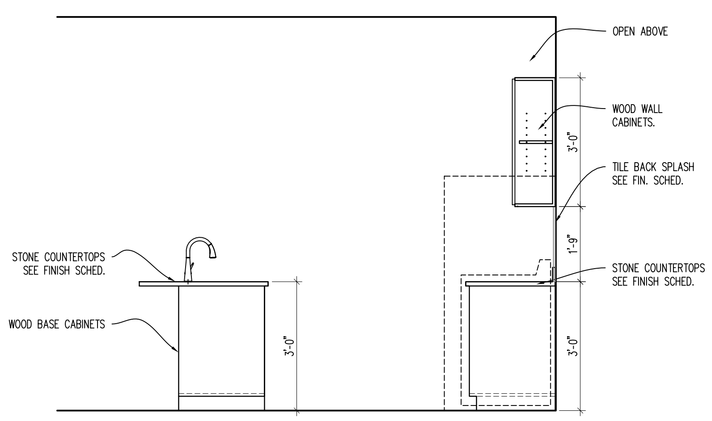

ELEVATION
SCALE: 1/2" = 1'-0" (1 / A305.2)

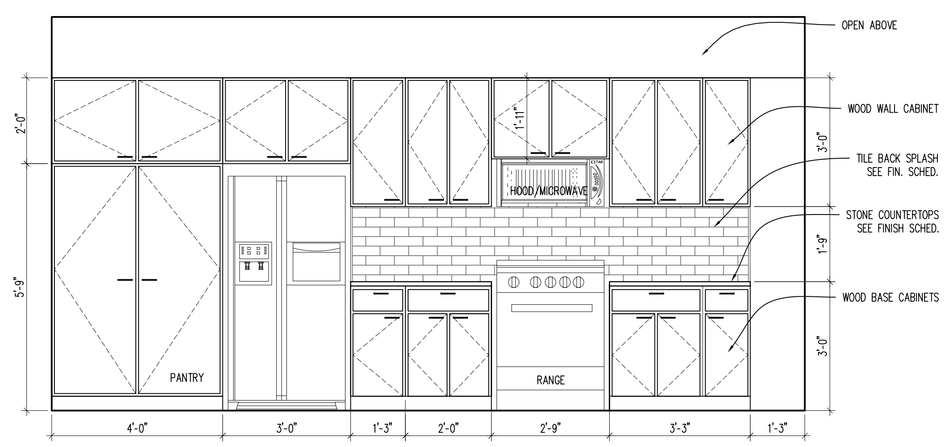

ELEVATION
SCALE: 1/2" = 1'-0" (2 / A305.2)

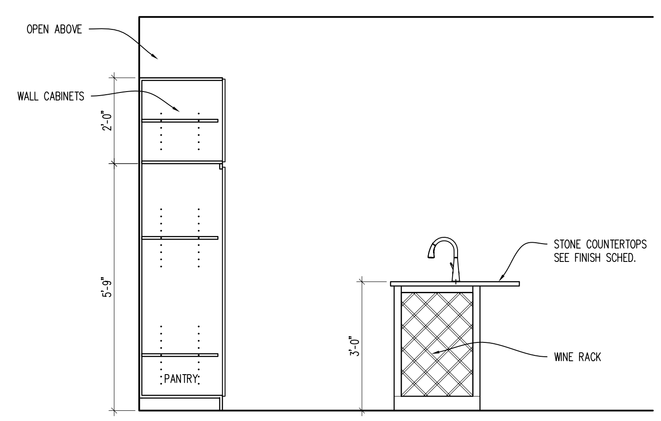

ELEVATION
SCALE: 1/2" = 1'-0" (3 / A305.2)

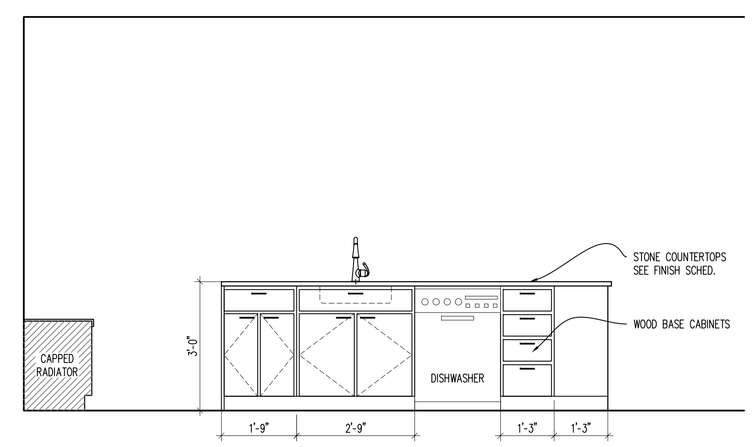

ELEVATION
SCALE: 1/2" = 1'-0" (4 / A305.2)

APARTMENT ROOM FINISH SCHEDULE

ROOM NAME	FLOOR	BASE	WALLS NORTH	WALLS SOUTH	WALLS EAST	WALLS WEST	CEILING	REMARKS	REV. NO.
LIVING AREA	VP-1	RB-3	PT-1	PT-1	PT-1	PT-1	PT-3	NOTES: A	
DINING AREA	VP-1	RB-3	PT-1	PT-1	PT-1	PT-1	PT-3	NOTES: A	
KITCHEN	VP-1	RB-3	PT-1	PT-1	PT-1	PT-1	PT-3	NOTES: A	
CLOSET	VP-1	RB-3	PT-1	PT-1	PT-1	PT-1	PT-3	NOTES: A	
BEDROOM	VP-1	RB-3	PT-1	PT-1	PT-1	PT-1	PT-3	NOTES: A	
WALK-IN CLOSET / LAUNDRY	VP-1	RB-3	PT-1	PT-1	PT-1	PT-1	PT-3	NOTES: A	
LINEN	VP-1	RB-3	PT-1	PT-1	PT-1	PT-1	PT-3	NOTES: A	
BATHROOM	VP-1	RB-3	PT-1	PT-1	PT-1	PT-1	PT-3	NOTES: A	
FOYER / CORRIDOR	VP-1	RB-3	PT-1	PT-1	PT-1	PT-1	PT-3	NOTES: A	

NOTES:
A. ALL TRIM, CASINGS, DOORS, ETC ARE TO BE PAINTED. COLOR & SHEEN TBD.

APARTMENT DOOR SCHEDULE

DOOR MARK	DOOR LOCATION	DOOR INFORMATION SIZE WIDTH	HEIGHT	THICK	STYLE	DOOR MATERIAL	FRAME INFORMATION TYPE	FRAME MATERIAL	DETAIL HEAD	JAMB	OTHER	HDW. SET	FIRE RATING	REMARKS
D BR	BEDROOM	2'-8"	6'-8"	1 3/8"	2	OAK	A	WD	5/A600	6/A600	–	2	–	PRE-HUNG STAINED
D BTH	BATHROOM	2'-8"	6'-8"	1 3/8"	2	OAK	A	WD	5/A600	6/A600	–	2	–	PRE-HUNG STAINED
D C	CLOSET / LAUNDRY	2'-6"	6'-8"	1 3/8"	2	OAK	A	WD	5/A600	6/A600	–	3	–	PRE-HUNG STAINED
D C	CLOSET	2'-6"	6'-8"	1 3/8"	2	OAK	A	WD	5/A600	6/A600	–	3	–	PRE-HUNG STAINED
D LI	LINEN	2'-0"	6'-8"	1 3/8"	2	OAK	A	WD	5/A600	6/A600	–	3	–	PRE-HUNG STAINED

STATE OF OHIO JOSEPH A. BODKIN 3135567 REGISTERED ARCHITECT
Joseph A. Bodkin, License #3135567
Expiration Date: 12.31.2023

modelgroup
DEVELOPMENT • CONSTRUCTION • MANAGEMENT
1826 Race Street
Cincinnati, Ohio 45202
513.559.0048

Formica Building
Office/Apartments
Auditor Address: 115 E. 5th Street, Actual Address: 120 E. 4th Street
Cincinnati OH 45202

No.	Revisions	Date
2		

Project: Formica Building
115 E 5th Street
Cincinnati, Ohio 45202
Sheet Title: Unit 2
Construction
Issue Date
Project #: 2022_259
Scale: As Noted
Drawn
Checked

A305.2

APPROVED
CIN BD
2022P03573
02/01/23
city of CINCINNATI BUILDINGS & INSPECTIONS
C:\Users\jbodkin\Dropbox\01_MGRG_Projects\01_Formica\From Ken_PHASE C\CADs - Phase C - From Ken\V03_Formica_A300 - Floors 3-10.dwg\A305.2 - F2. Plot Date/Time: Nov 15, 2022-8:07am - By: jbodkin

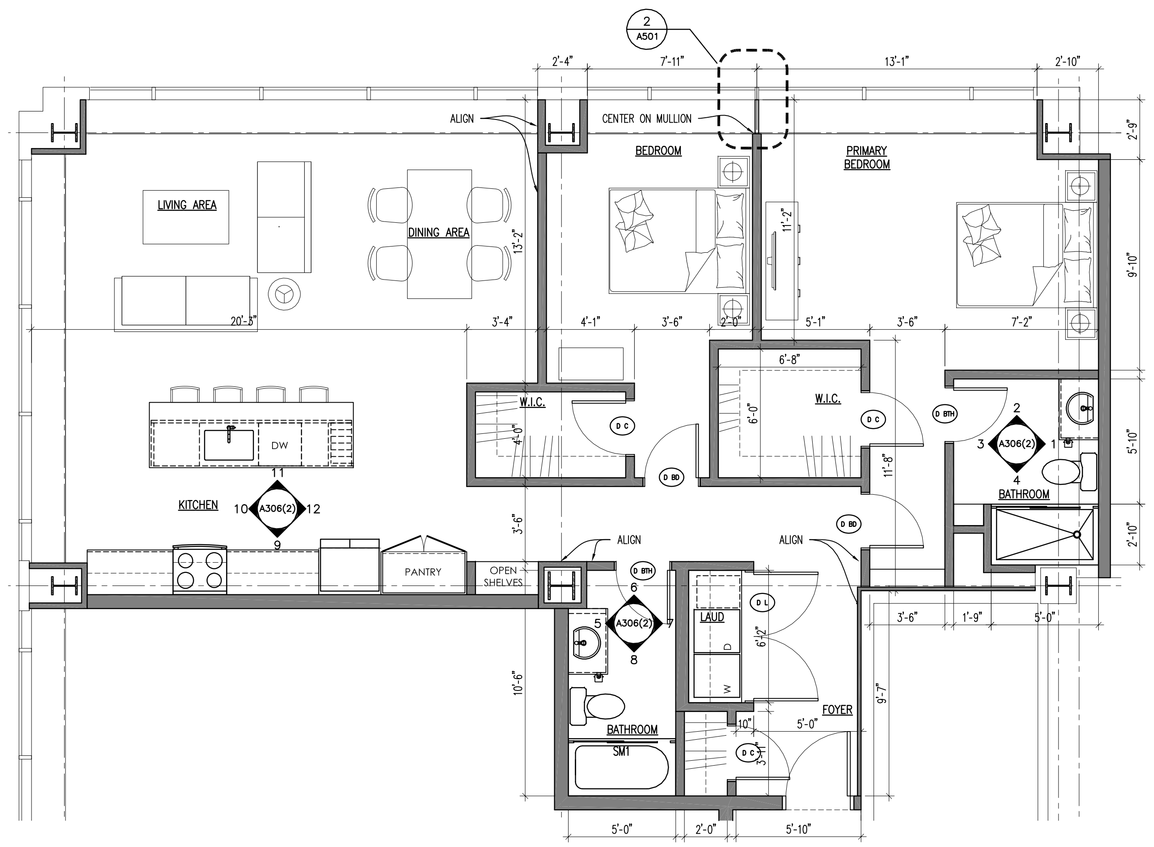

APARTMENT FLOOR PLAN
SCALE: 1/4" = 1'-0"
1 A306(1)

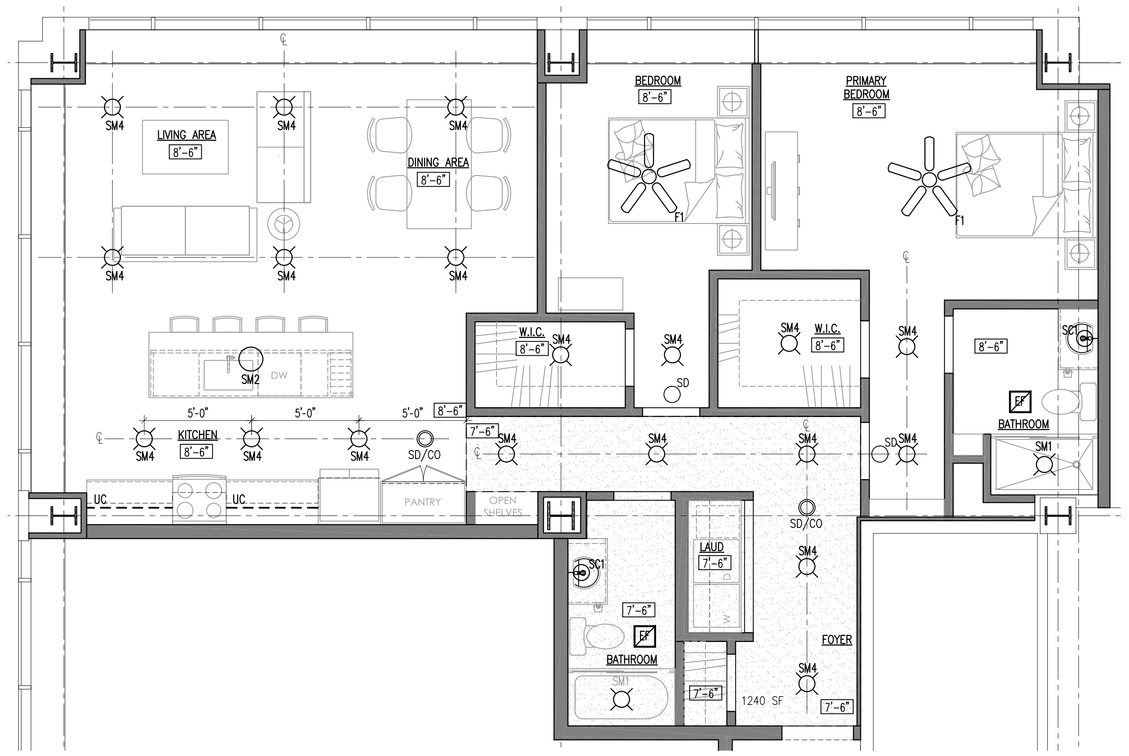

APARTMENT REFLECTED CEILING PLAN
SCALE: 1/4" = 1'-0"
2 A306(1)

GENERAL APARTMENT NOTES

A. DOOR FRAME SHALL BE 4" FROM FACE OF WALL TO BACKSIDE OF FRAME U.N.O.
B. ALL NEW UNIT PARTITIONS ARE TYPE 3 U.N.O.
C. DIMENSIONS ARE FROM FINISH FACE OF WALL TO FINISH FACE OF WALL U.N.O.
D. CENTER ALL CLOSET DOORS ON CLOSETS U.N.O.
E. ALL LIGHTING FOR REFERENCE ONLY.
F. ALL CABINET DRAWINGS ARE FOR DESIGN INTENT ONLY. CABINET MAKER TO SUBMIT DETAILED SHOP DRAWINGS FOR REVIEW. BASIS OF DESIGN ARE SMART CABINETS
I. ALL VISIBLE SIDES OF CABINETS ARE TO RECEIVE A FINISHED PANEL THAT MATCHES THE CABINETS. THIS INCLUDES CABINETS THAT ARE UP AGAINST THE RADIATORS AND/OR FACING THE WINDOWS. TYP OF ALL.
J. ALL APPLIANCES IN THE APARTMENT UNITS WILL BE NEW ENERGY STAR APPLIANCES.
K. PROVIDE BLOCKING FOR FUTURE GRAB BARS IN ALL UNIT BATHROOMS.
L. ALL PANTRY AND LINEN CLOSETS TO RECEIVE FIVE (5) ADJUSTABLE MELAMINE SHELVES.
M. ALL CLOSETS TO RECEIVE ONE (1) MELAMINE SHELF AND COAT ROD. U.N.O.
N. EACH SHOWER TO BE PROVIDED W/ GLASS SHOWER DOOR.
O. PROVIDE AND INSTALL IN EACH APARTMENT (2) TOWEL BARS, (1) TOILET PAPER HOLDER, (1) ROBE HOOK.

APARTMENT ROOM FINISH SCHEDULE

ROOM NAME	FLOOR	BASE	WALLS NORTH	WALLS SOUTH	WALLS EAST	WALLS WEST	CEILING	REMARKS	REV. NO.
LIVING AREA	VP-1	RB-3	PT-1	PT-1	PT-1	PT-1	PT-3	NOTES: A	
DINING AREA	VP-1	RB-3	PT-1	PT-1	PT-1	PT-1	PT-3	NOTES: A	
KITCHEN	VP-1	RB-3	PT-1	PT-1	PT-1	PT-1	PT-3	NOTES: A	
BATHROOM	VP-1	RB-3	PT-1	PT-1	PT-1	PT-1	PT-3	NOTES: A	
FOYER / CORRIDOR	VP-1	RB-3	PT-1	PT-1	PT-1	PT-1	PT-3	NOTES: A	
CLOSET	VP-1	RB-3	PT-1	PT-1	PT-1	PT-1	PT-3	NOTES: A	
LAUNDRY	VP-1	RB-3	PT-1	PT-1	PT-1	PT-1	PT-3	NOTES: A	
BEDROOM	VP-1	RB-3	PT-1	PT-1	PT-1	PT-1	PT-3	NOTES: A	
WALK-IN CLOSET	VP-1	RB-3	PT-1	PT-1	PT-1	PT-1	PT-3	NOTES: A	
PRIMARY BEDROOM	VP-1	RB-3	PT-1	PT-1	PT-1	PT-1	PT-3	NOTES: A	
WALK-IN CLOSET	VP-1	RB-3	PT-1	PT-1	PT-1	PT-1	PT-3	NOTES: A	
BATHROOM	VP-1	RB-3	PT-1	PT-1	PT-1	PT-1	PT-3	NOTES: A	

NOTES:
A. ALL TRIM, CASINGS, DOORS, ETC ARE TO BE PAINTED. COLOR & SHEEN TBD.

APARTMENT DOOR SCHEDULE

DOOR MARK	DOOR LOCATION	DOOR INFORMATION SIZE WIDTH	HEIGHT	THICK	STYLE	DOOR MATERIAL	FRAME INFORMATION TYPE	FRAME MATERIAL	DETAIL HEAD	JAMB	OTHER	HDW. SET	FIRE RATING	REMARKS
D BR (x2)	BEDROOMS	2'-8"	6'-8"	1 3/8"	2	OAK	A	WD	5/A600	6/A600	–	2	–	PRE-HUNG. STAINED
D BTH (x2)	BATHROOMS	2'-8"	6'-8"	1 3/8"	2	OAK	A	WD	5/A600	6/A600	–	2	–	PRE-HUNG. STAINED
D C (x3)	CLOSET / W.I.C.	2'-6"	6'-8"	1 3/8"	2	OAK	A	WD	5/A600	6/A600	–	3	–	PRE-HUNG. STAINED
D L (x1)	LAUNDRY	(3'-0"x2) 6'-0"	6'-8"	1 3/8"	2	OAK	A	WD	5/A600	6/A600	–	4	–	PRE-HUNG. STAINED

STATE OF OHIO JOSEPH A. BODKIN 8135567 REGISTERED ARCHITECT
Joseph A. Bodkin, License #8135567
Expiration Date: 12.31.2023

modelgroup
DEVELOPMENT • CONSTRUCTION • MANAGEMENT
1826 Race Street
Cincinnati, Ohio 45202
513.559.0048

Formica Building

Office/Apartments
Auditor Address: 115 E. 5th Street, Actual Address: 120 E. 4th Street
Cincinnati OH 45202

No.	Revisions	Date
1	ENG CHG #1	11.14.2022

Project: Formica Building
115 E 5th Street
Cincinnati, Ohio 45202
Set: UPD G
Construction
Project No: 2022_259
Scale: As Noted
Drawn
Checked
Issue Date

A306(1)

APPROVED
CIN BD
2022P03573
02/01/23

cityof CINCINNATI BUILDINGS & INSPECTIONS

C:\Users\jbodkin\Dropbox\01_MBG_Projects\2_Formica Building\Revit\03_Formica_A300 - Floors 11-12.dwg-A306 (1)- G. Plot Date/Time: Nov 15, 2022-8:12am - By: jbodkin

GENERAL APARTMENT NOTES

A. DOOR FRAME SHALL BE 4" FROM FACE OF WALL TO BACKSIDE OF FRAME U.N.O.
B. ALL NEW UNIT PARTITIONS ARE TYPE 3 U.N.O.
C. DIMENSIONS ARE FROM FINISH FACE OF WALL TO FINISH FACE OF WALL U.N.O.
D. CENTER ALL CLOSET DOORS ON CLOSETS U.N.O.
E. ALL LIGHTING FOR REFERENCE ONLY.
F. ALL CABINET DRAWINGS ARE FOR DESIGN INTENT ONLY. CABINET MAKER TO SUBMIT DETAILED SHOP DRAWINGS FOR REVIEW. BASIS OF DESIGN ARE SMART CABINETS
I. ALL VISIBLE SIDES OF CABINETS ARE TO RECEIVE A FINISHED PANEL THAT MATCHES THE CABINETS. THIS INCLUDES CABINETS THAT ARE UP AGAINST THE RADIATORS AND/OR FACING THE WINDOWS. TYP OF ALL.
J. ALL APPLIANCES IN THE APARTMENT UNITS WILL BE NEW ENERGY STAR APPLIANCES.
K. PROVIDE BLOCKING FOR FUTURE GRAB BARS IN ALL UNIT BATHROOMS.
L. ALL PANTRY AND LINEN CLOSETS TO RECEIVE FIVE (5) ADJUSTABLE MELAMINE SHELVES.
M. ALL CLOSETS TO RECEIVE ONE (1) MELAMINE SHELF AND COAT ROD. U.N.O.
N. EACH SHOWER TO BE PROVIDED W/ GLASS SHOWER DOOR.
O. PROVIDE AND INSTALL IN EACH APARTMENT (2) TOWEL BARS, (1) TOILET PAPER HOLDER, (1) ROBE HOOK.

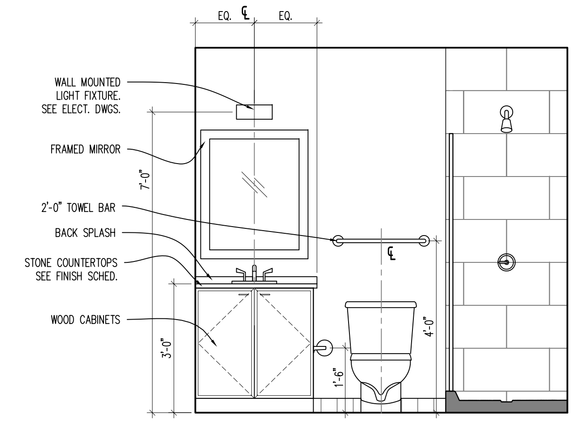

ELEVATION 1 A306(2)
SCALE: 1/2" = 1'-0"

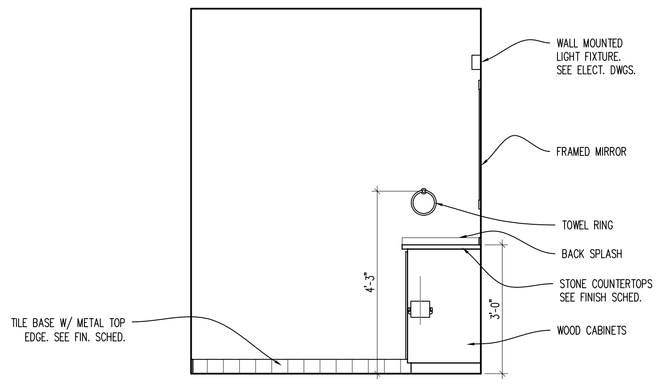

ELEVATION 2 A306(2)
SCALE: 1/2" = 1'-0"

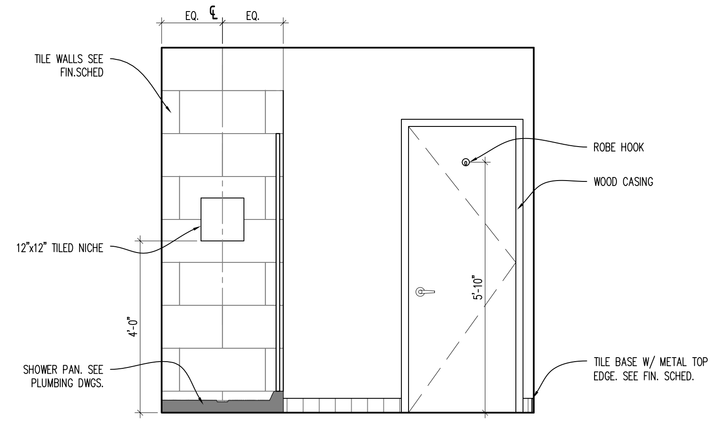

ELEVATION 3 A306(2)
SCALE: 1/2" = 1'-0"

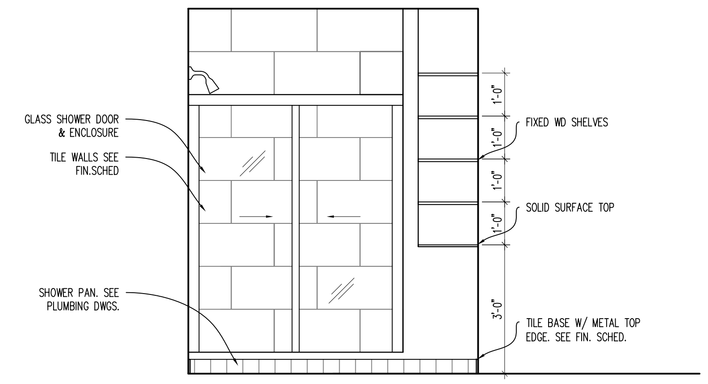

ELEVATION 4 A306(2)
SCALE: 1/2" = 1'-0"

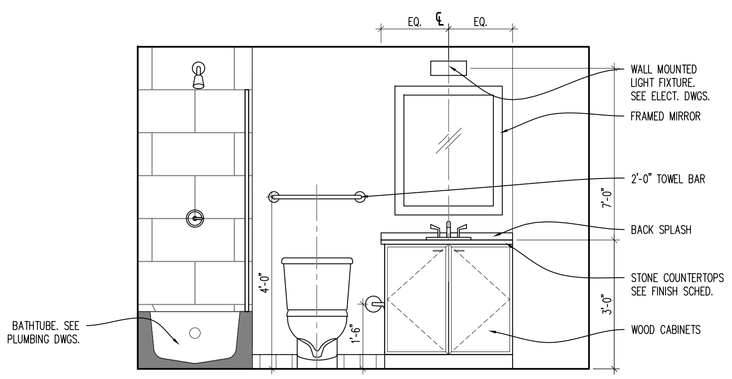

ELEVATION 5 A306(2)
SCALE: 1/2" = 1'-0"

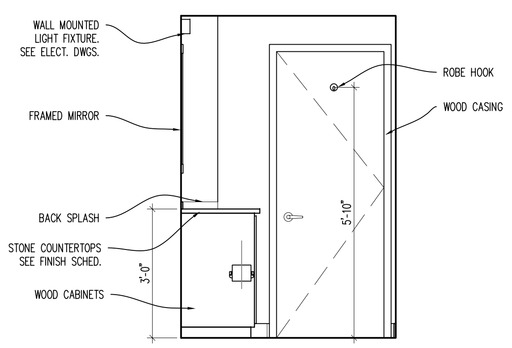

ELEVATION 6 A306(2)
SCALE: 1/2" = 1'-0"

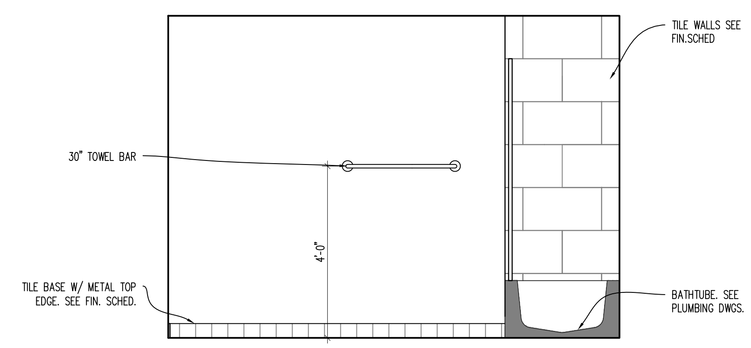

ELEVATION 7 A306(2)
SCALE: 1/2" = 1'-0"

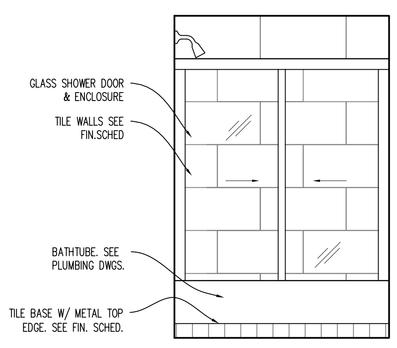

ELEVATION 8 A306(2)
SCALE: 1/2" = 1'-0"

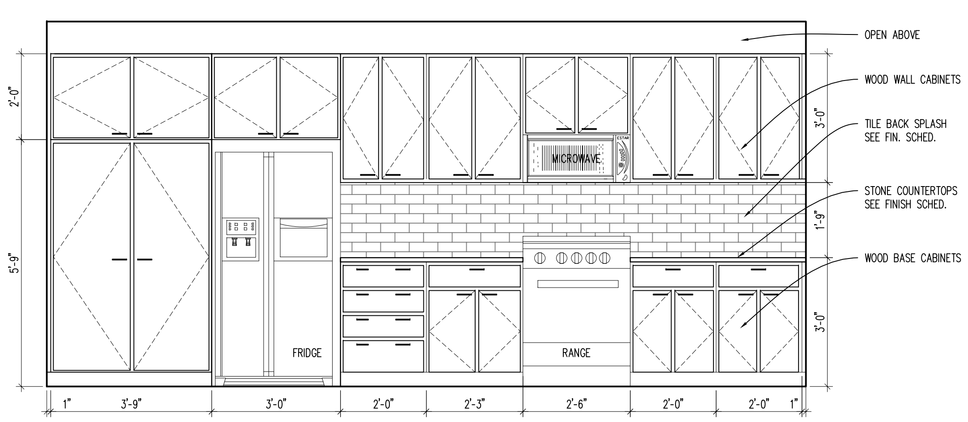

ELEVATION 9 A306(2)
SCALE: 1/2" = 1'-0"

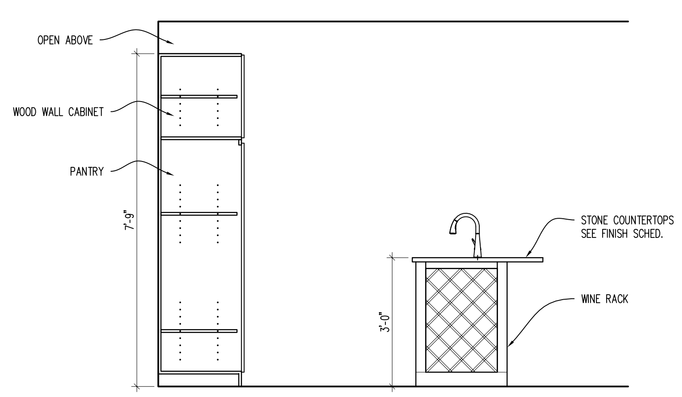

ELEVATION 10 A306(2)
SCALE: 1/2" = 1'-0"

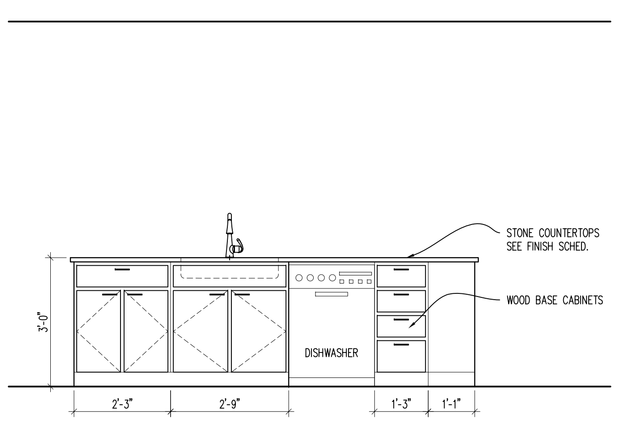

ELEVATION 11 A306(2)
SCALE: 1/2" = 1'-0"

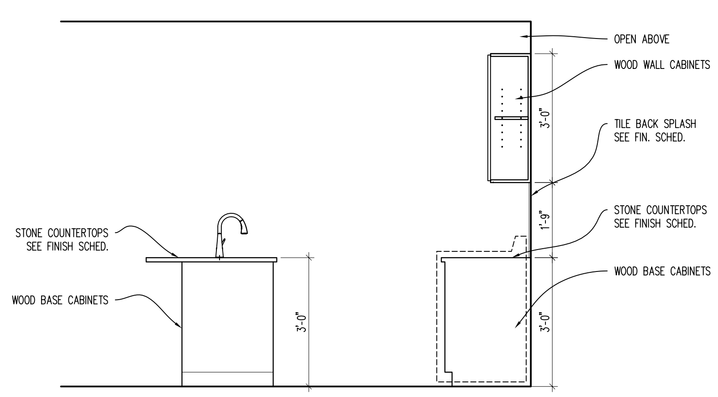

ELEVATION 12 A306(2)
SCALE: 1/2" = 1'-0"

STATE OF OHIO JOSEPH A. BODKIN 8135567 REGISTERED ARCHITECT
Joseph A. Bodkin, License #8135567
Expiration Date: 12.31.2023

modelgroup
DEVELOPMENT • CONSTRUCTION • MANAGEMENT
1826 Race Street
Cincinnati, Ohio 45202
513.559.0048

Formica Building
Office/Apartments
Auditor Address: 115 E. 5th Street, Actual Address: 120 E. 4th Street
Cincinnati OH 45202

No.	Revisions	Date
4	ENG CHG #1	11.14.2022

Project: Formica Building
115 E 5th Street
Cincinnati, Ohio 45202
Section: G
Construction
Project #: 2022_259
Scale: As Noted
Drawn
Checked
Issue Date

A306(2)

APPROVED
CIN BD
2022P03573
02/01/23
city of CINCINNATI BUILDINGS & INSPECTIONS

C:\Users\jbodkin\Dropbox\01-NBDC Projects\2022\From 1ten1_PHASE C\CADs - Phase C - From 1ten1\03_Formica.A300 - Floors 11-12.dwg-A306 (2) - G. Plot Date/Time: Nov 15, 2022-8:14pm - By: jbodkin

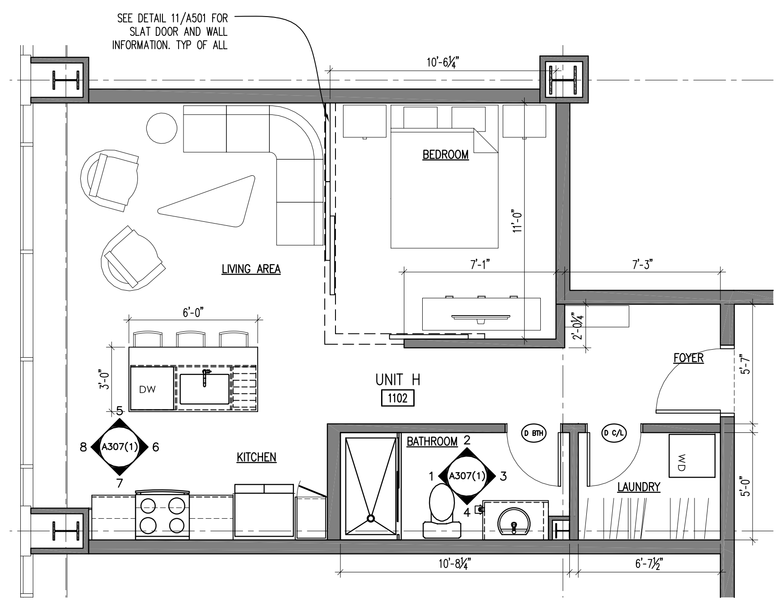

APARTMENT FLOOR PLAN
SCALE: 1/4" = 1'-0"
1 A307.1

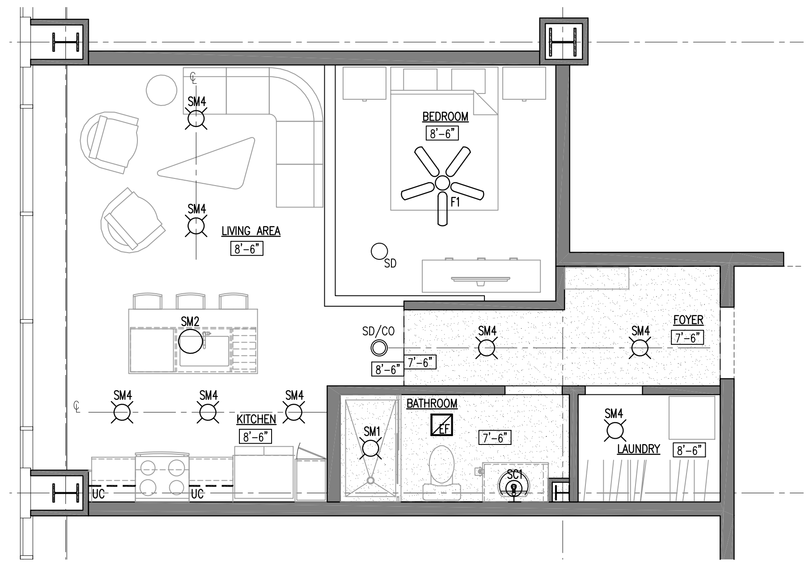

APARTMENT REFLECTED CEILING PLAN
SCALE: 1/4" = 1'-0"
2 A307.1

GENERAL APARTMENT NOTES

A. DOOR FRAME SHALL BE 4" FROM FACE OF WALL TO BACKSIDE OF FRAME U.N.O.
B. ALL NEW UNIT PARTITIONS ARE TYPE 3 U.N.O.
C. DIMENSIONS ARE FROM FINISH FACE OF WALL TO FINISH FACE OF WALL U.N.O.
D. CENTER ALL CLOSET DOORS ON CLOSETS U.N.O.
E. ALL LIGHTING FOR REFERENCE ONLY.
F. ALL CABINET DRAWINGS ARE FOR DESIGN INTENT ONLY. CABINET MAKER TO SUBMIT DETAILED SHOP DRAWINGS FOR REVIEW. BASIS OF DESIGN ARE SMART CABINETS
I. ALL VISIBLE SIDES OF CABINETS ARE TO RECEIVE A FINISHED PANEL THAT MATCHES THE CABINETS. THIS INCLUDES CABINETS THAT ARE UP AGAINST THE RADIATORS AND/OR FACING THE WINDOWS. TYP OF ALL.
J. ALL APPLIANCES IN THE APARTMENT UNITS WILL BE NEW ENERGY STAR APPLIANCES.
K. PROVIDE BLOCKING FOR FUTURE GRAB BARS IN ALL UNIT BATHROOMS.
L. ALL PANTRY AND LINEN CLOSETS TO RECEIVE FIVE (5) ADJUSTABLE MELAMINE SHELVES.
M. ALL CLOSETS TO RECEIVE ONE (1) MELAMINE SHELF AND COAT ROD. U.N.O.
N. EACH SHOWER TO BE PROVIDED W/ GLASS SHOWER DOOR.
O. PROVIDE AND INSTALL IN EACH APARTMENT (2) TOWEL BARS, (1) TOILET PAPER HOLDER, (1) ROBE HOOK.

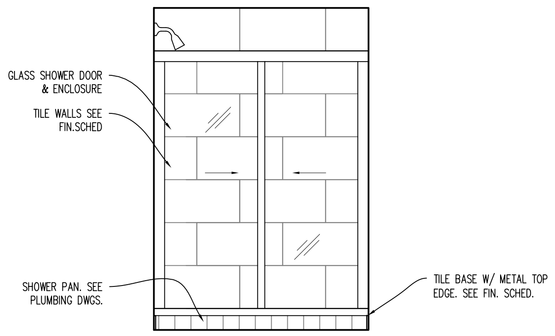

ELEVATION
SCALE: 1/2" = 1'-0"
1 A307.1

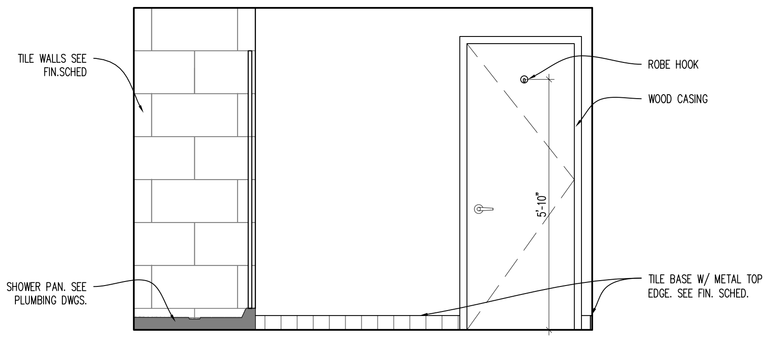

ELEVATION
SCALE: 1/2" = 1'-0"
2 A307.1

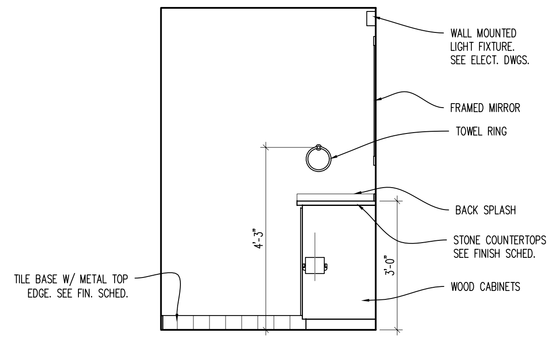

ELEVATION
SCALE: 1/2" = 1'-0"
3 A307.1

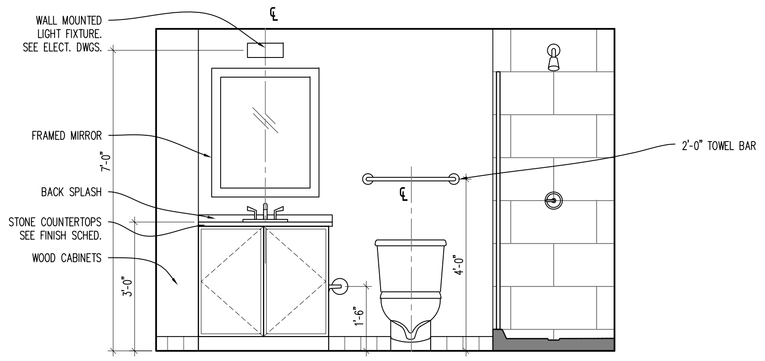

ELEVATION
SCALE: 1/2" = 1'-0"
4 A307.1

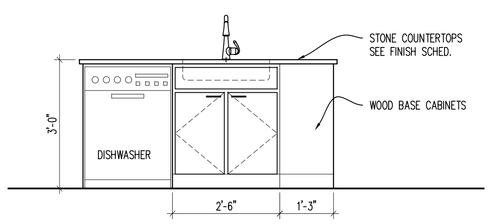

ELEVATION
SCALE: 1/2" = 1'-0"
5 A307.1

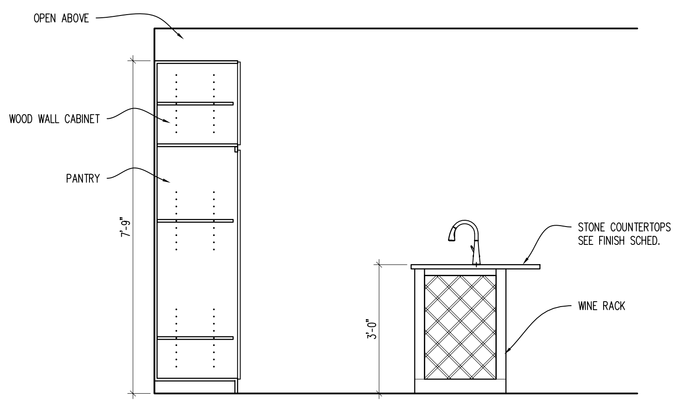

ELEVATION
SCALE: 1/2" = 1'-0"
6 A307.1

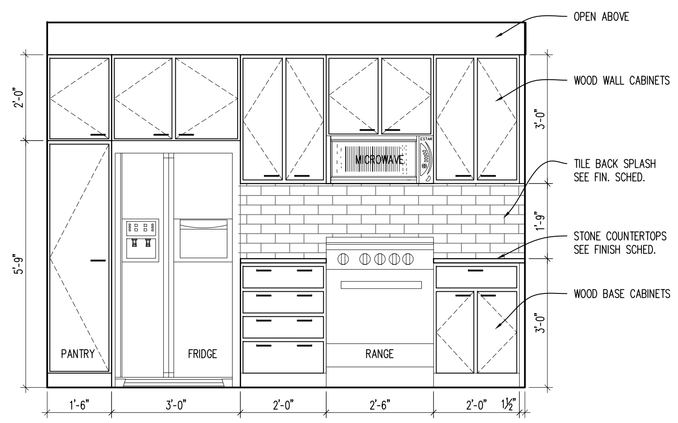

ELEVATION
SCALE: 1/2" = 1'-0"
7 A307.1

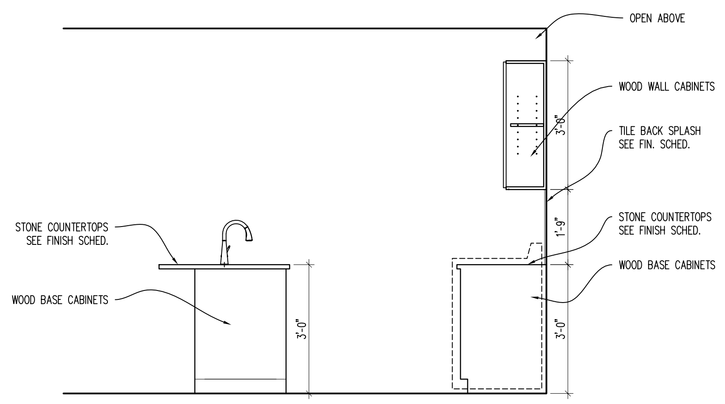

ELEVATION
SCALE: 1/2" = 1'-0"
8 A307.1

APARTMENT ROOM FINISH SCHEDULE

ROOM NAME	FLOOR	BASE	WALLS NORTH	WALLS SOUTH	WALLS EAST	WALLS WEST	CEILING	REMARKS	REV. NO.
LIVING AREA	VP-1	RB-3	PT-1	PT-1	PT-1	PT-1	PT-3	NOTES: A	
KITCHEN	VP-1	RB-3	PT-1	PT-1	PT-1	PT-1	PT-3	NOTES: A	
CLOSET / LAUNDRY	VP-1	RB-3	PT-1	PT-1	PT-1	PT-1	PT-3	NOTES: A	
BEDROOM	VP-1	RB-3	PT-1	PT-1	PT-1	PT-1	PT-3	NOTES: A	
BATHROOM	VP-1	RB-3	PT-1	PT-1	PT-1	PT-1	PT-3	NOTES: A	
FOYER / CORRIDOR	VP-1	RB-3	PT-1	PT-1	PT-1	PT-1	PT-3	NOTES: A	

NOTES:
A. ALL TRIM, CASINGS, DOORS, ETC ARE TO BE PAINTED. COLOR & SHEEN TBD.

APARTMENT DOOR SCHEDULE

DOOR MARK	DOOR LOCATION	DOOR INFORMATION SIZE WIDTH	HEIGHT	THICK	STYLE	DOOR MATERIAL	FRAME INFORMATION TYPE	FRAME MATERIAL	DETAIL HEAD	JAMB	OTHER	HDW. SET	FIRE RATING	REMARKS
D BTH (x1)	BATHROOM	2'-8"	6'-8"	1 3/8"	2	OAK	A	WD	5/A600	6/A600	–	2	–	PRE-HUNG. STAINED
D C/L (x1)	CLOSET / LAUNDRY	2'-6"	6'-8"	1 3/8"	2	OAK	A	WD	5/A600	6/A600	–	3	–	PRE-HUNG. STAINED

STATE OF OHIO JOSEPH A. BODKIN 313567 REGISTERED ARCHITECT
Joseph A. Bodkin, License #313567
Expiration Date: 12.31.2023

modelgroup
DEVELOPMENT • CONSTRUCTION • MANAGEMENT
1826 Race Street
Cincinnati, Ohio 45202
513.559.0048

Formica Building
Office/Apartments
Auditor Address: 115 E. 5th Street, Actual Address: 120 E. 4th Street
Cincinnati OH 45202

No.	Revisions	Date
1	ENG CHG #1	11.14.2022

Project: Formica Building
115 E 5th Street
Cincinnati, Ohio 45202
Set: UNIT H – 11th Construction
Project No: 2022_259
Issue Date
Scale: As Noted
Drawn
Checked

A307.1

APPROVED CIN BD 2022P03573 02/01/23
city of CINCINNATI BUILDINGS & INSPECTIONS
C:\Users\jbodkin\Desktop\UNIT_MODS_Projects\A-PHASE C\CADs – Phase C – From 1st\1_PHASE C\CADs – From 1st\03_Formica_A300 – Floors 11-12.dwg-A307.1 – H_11 Plot Date/Time: Nov 15, 2022-8:16am – By: jbodkin

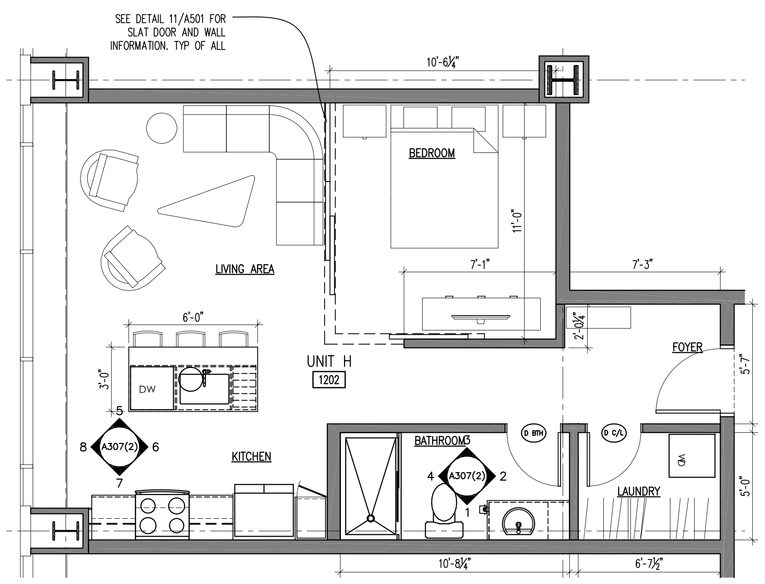

APARTMENT FLOOR PLAN (1 / A307.2)
SCALE: 1/4" = 1'-0"

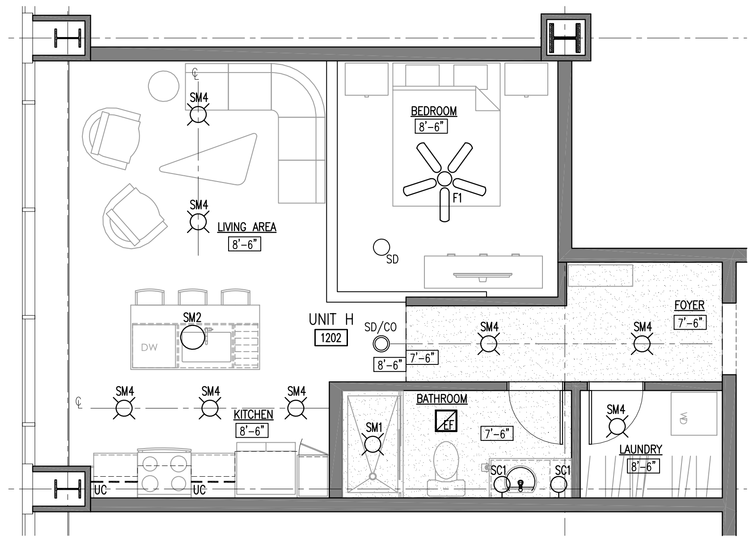

APARTMENT REFLECTED CEILING PLAN (2 / A307.2)
SCALE: 1/4" = 1'-0"

GENERAL APARTMENT NOTES

A. DOOR FRAME SHALL BE 4" FROM FACE OF WALL TO BACKSIDE OF FRAME U.N.O.
B. ALL NEW UNIT PARTITIONS ARE TYPE 3 U.N.O.
C. DIMENSIONS ARE FROM FINISH FACE OF WALL TO FINISH FACE OF WALL U.N.O.
D. CENTER ALL CLOSET DOORS ON CLOSETS U.N.O.
E. ALL LIGHTING FOR REFERENCE ONLY.
F. ALL CABINET DRAWINGS ARE FOR DESIGN INTENT ONLY. CABINET MAKER TO SUBMIT DETAILED SHOP DRAWINGS FOR REVIEW. BASIS OF DESIGN ARE SMART CABINETS
I. ALL VISIBLE SIDES OF CABINETS ARE TO RECEIVE A FINISHED PANEL THAT MATCHES THE CABINETS. THIS INCLUDES CABINETS THAT ARE UP AGAINST THE RADIATORS AND/OR FACING THE WINDOWS. TYP OF ALL.
J. ALL APPLIANCES IN THE APARTMENT UNITS WILL BE NEW ENERGY STAR APPLIANCES.
K. PROVIDE BLOCKING FOR FUTURE GRAB BARS IN ALL UNIT BATHROOMS.
L. ALL PANTRY AND LINEN CLOSETS TO RECEIVE FIVE (5) ADJUSTABLE MELAMINE SHELVES.
M. ALL CLOSETS TO RECEIVE ONE (1) MELAMINE SHELF AND COAT ROD. U.N.O.
N. EACH SHOWER TO BE PROVIDED W/ GLASS SHOWER DOOR.
O. PROVIDE AND INSTALL IN EACH APARTMENT (2) TOWEL BARS, (1) TOILET PAPER HOLDER, (1) ROBE HOOK.

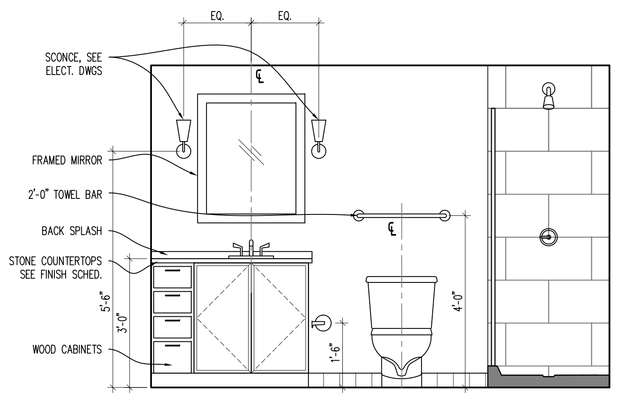

ELEVATION (1 / A307.2)
SCALE: 1/2" = 1'-0"

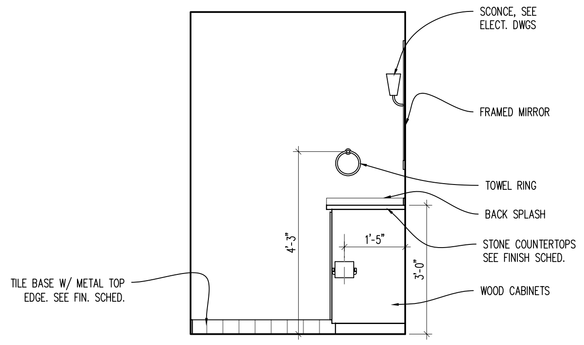

ELEVATION (2 / A307.2)
SCALE: 1/2" = 1'-0"

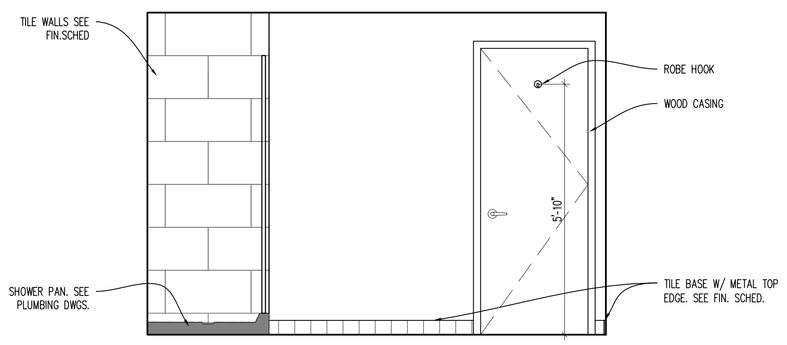

ELEVATION (3 / A307.2)
SCALE: 1/2" = 1'-0"

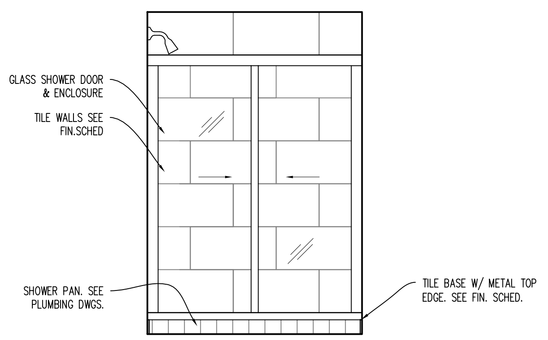

ELEVATION (4 / A307.2)
SCALE: 1/2" = 1'-0"

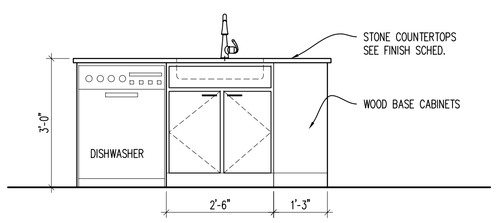

ELEVATION (5 / A307.2)
SCALE: 1/2" = 1'-0"

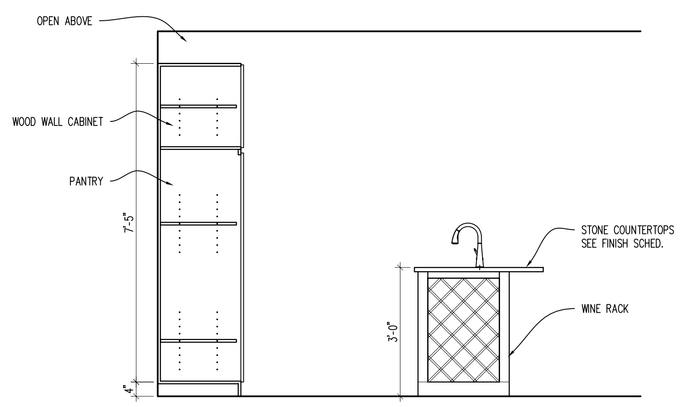

ELEVATION (6 / A307.2)
SCALE: 1/2" = 1'-0"

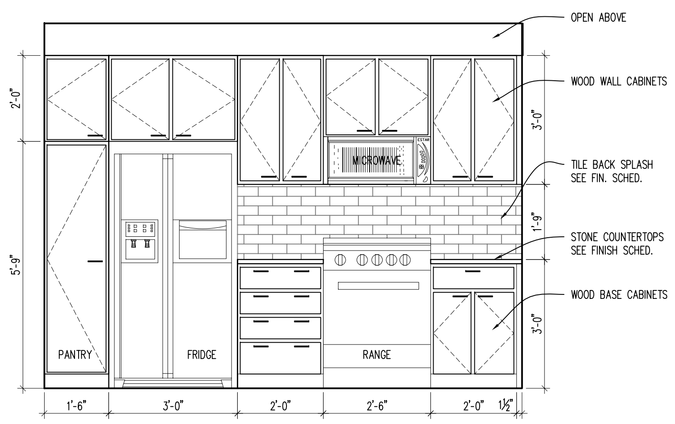

ELEVATION (7 / A307.2)
SCALE: 1/2" = 1'-0"

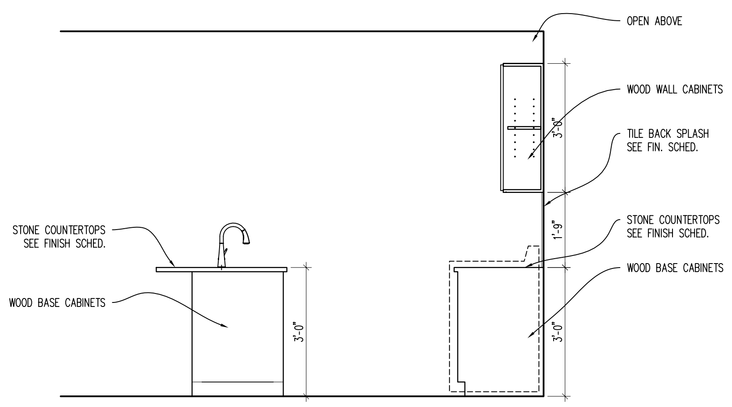

ELEVATION (8 / A307.2)
SCALE: 1/2" = 1'-0"

APARTMENT ROOM FINISH SCHEDULE

ROOM NAME	FLOOR	BASE	WALLS NORTH	WALLS SOUTH	WALLS EAST	WALLS WEST	CEILING	REMARKS	REV. NO.
LIVING AREA	VP-1	RB-3	PT-1	PT-1	PT-1	PT-1	PT-3	NOTES: A	
KITCHEN	VP-1	RB-3	PT-1	PT-1	PT-1	PT-1	PT-3	NOTES: A	
CLOSET / LAUNDRY	VP-1	RB-3	PT-1	PT-1	PT-1	PT-1	PT-3	NOTES: A	
BEDROOM	VP-1	RB-3	PT-1	PT-1	PT-1	PT-1	PT-3	NOTES: A	
BATHROOM	VP-1	RB-3	PT-1	PT-1	PT-1	PT-1	PT-3	NOTES: A	
FOYER / CORRIDOR	VP-1	RB-3	PT-1	PT-1	PT-1	PT-1	PT-3	NOTES: A	

NOTES:
A. ALL TRIM, CASINGS, DOORS, ETC ARE TO BE PAINTED. COLOR & SHEEN TBD.

APARTMENT DOOR SCHEDULE

DOOR MARK	DOOR LOCATION	DOOR INFORMATION SIZE WIDTH	HEIGHT	THICK	STYLE	DOOR MATERIAL	FRAME INFORMATION TYPE	FRAME MATERIAL	DETAIL HEAD	JAMB	OTHER	HDW. SET	FIRE RATING	REMARKS
D BTH (x1)	BATHROOM	2'-8"	6'-8"	1 3/8"	2	OAK	A	WD	5/A600	6/A600	–	2	–	PRE-HUNG. STAINED
D C/L (x1)	CLOSET / LAUNDRY	2'-6"	6'-8"	1 3/8"	2	OAK	A	WD	5/A600	6/A600	–	3	–	PRE-HUNG. STAINED

STATE OF OHIO — JOSEPH A. BODKIN 313567 — REGISTERED ARCHITECT
Joseph A. Bodkin, License #313567
Expiration Date: 12.31.2023

modelgroup
DEVELOPMENT • CONSTRUCTION • MANAGEMENT
1826 Race Street
Cincinnati, Ohio 45202
513.559.0048

Formica Building
Office/Apartments
Auditor Address: 115 E. 5th Street, Actual Address: 120 E. 4th Street
Cincinnati OH 45202

No.	Revisions	Date
1	ENG CHG #1	11.14.2022

Project: Formica Building
115 E 5th Street
Cincinnati, Ohio 45202
Set: UNIT H
Construction
Project No: 2022_259
Issue Date
Scale: As Noted
Drawn
Checked

A307.2

APPROVED
CIN BD
2022P03573
02/01/23

cityof CINCINNATI BUILDINGS & INSPECTIONS

C:\Users\jbodkin\Dropbox\01_MBG_Projects\3.2022_From Ten1_PHASE C\CADs - Phase C - From Ten1\03_Formica_A300 - Floors 11-12.dwg-A307.2 - H. Plot Date/Time: Nov 15, 2022-8:17am - By: jbodkin

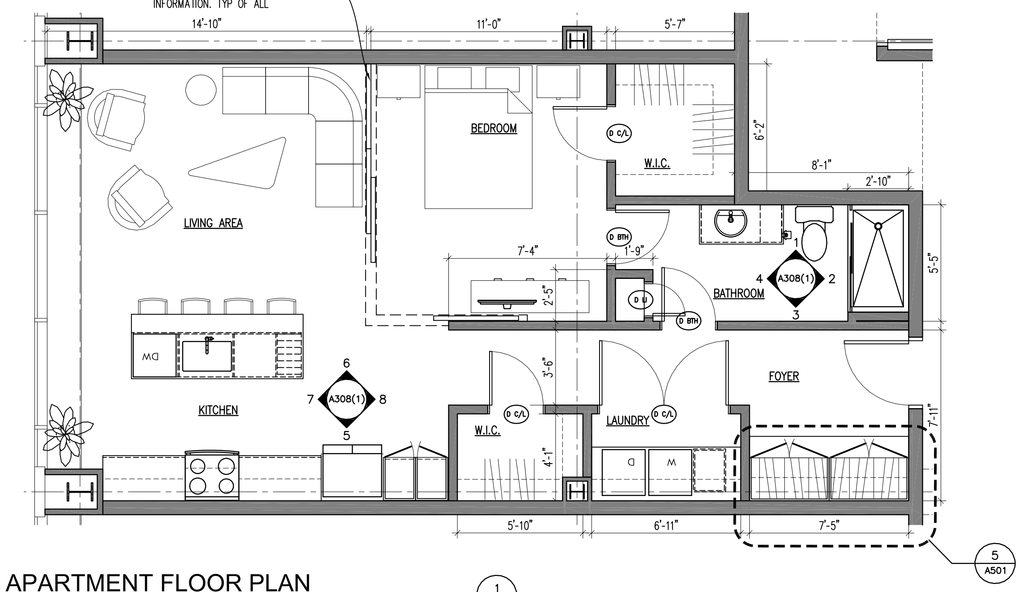

APARTMENT FLOOR PLAN
SCALE: 1/4" = 1'-0" (1 / A308.1)

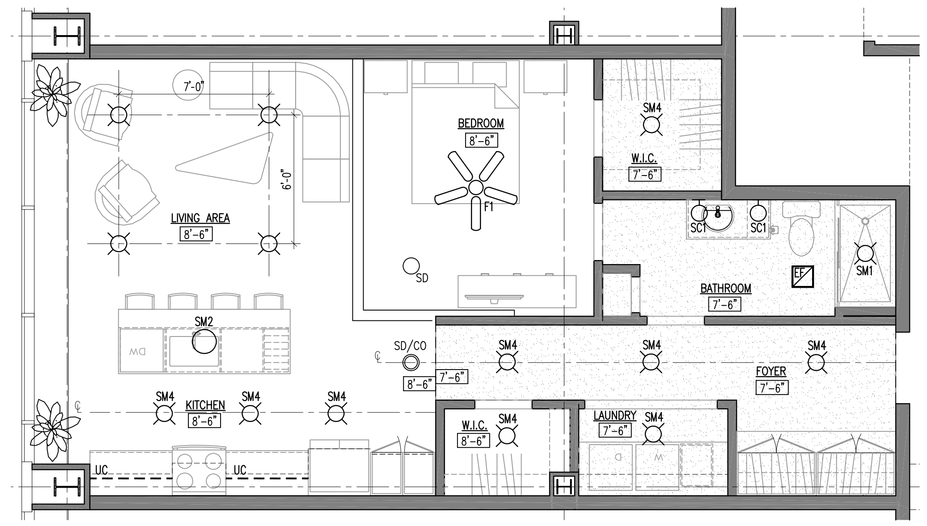

APARTMENT REFLECTED CEILING PLAN
SCALE: 1/4" = 1'-0" (2 / A308.1)

GENERAL APARTMENT NOTES

A. DOOR FRAME SHALL BE 4" FROM FACE OF WALL TO BACKSIDE OF FRAME U.N.O.
B. ALL NEW UNIT PARTITIONS ARE TYPE 3 U.N.O.
C. DIMENSIONS ARE FROM FINISH FACE OF WALL TO FINISH FACE OF WALL U.N.O.
D. CENTER ALL CLOSET DOORS ON CLOSETS U.N.O.
E. ALL LIGHTING FOR REFERENCE ONLY.
F. ALL CABINET DRAWINGS ARE FOR DESIGN INTENT ONLY. CABINET MAKER TO SUBMIT DETAILED SHOP DRAWINGS FOR REVIEW. BASIS OF DESIGN ARE SMART CABINETS
I. ALL VISIBLE SIDES OF CABINETS ARE TO RECEIVE A FINISHED PANEL THAT MATCHES THE CABINETS. THIS INCLUDES CABINETS THAT ARE UP AGAINST THE RADIATORS AND/OR FACING THE WINDOWS. TYP OF ALL.
J. ALL APPLIANCES IN THE APARTMENT UNITS WILL BE NEW ENERGY STAR APPLIANCES.
K. PROVIDE BLOCKING FOR FUTURE GRAB BARS IN ALL UNIT BATHROOMS.
L. ALL PANTRY AND LINEN CLOSETS TO RECEIVE FIVE (5) ADJUSTABLE MELAMINE SHELVES.
M. ALL CLOSETS TO RECEIVE ONE (1) MELAMINE SHELF AND COAT ROD. U.N.O.
N. EACH SHOWER TO BE PROVIDED W/ GLASS SHOWER DOOR.
O. PROVIDE AND INSTALL IN EACH APARTMENT (2) TOWEL BARS, (1) TOILET PAPER HOLDER, (1) ROBE HOOK.

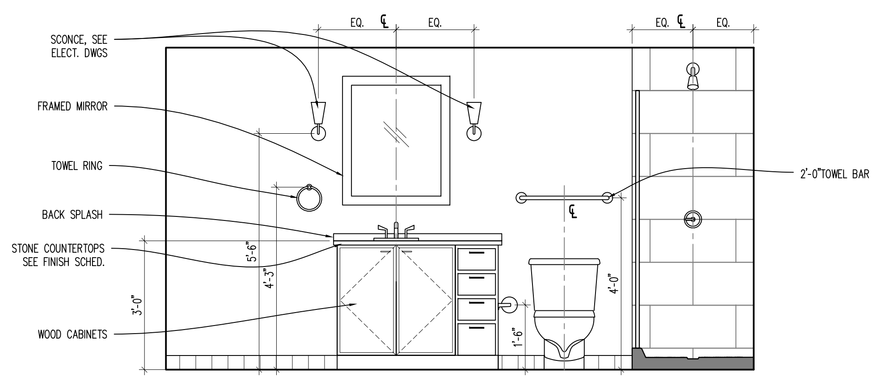

ELEVATION
SCALE: 1/2" = 1'-0" (1 / A308.1)

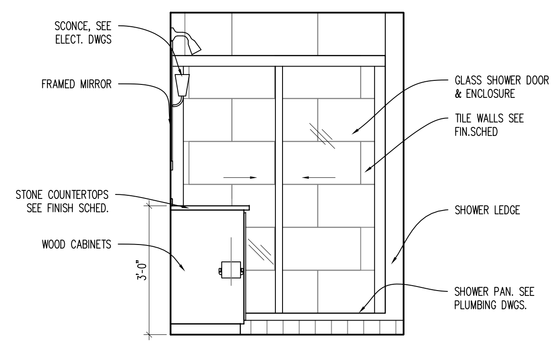

ELEVATION
SCALE: 1/2" = 1'-0" (2 / A308.1)

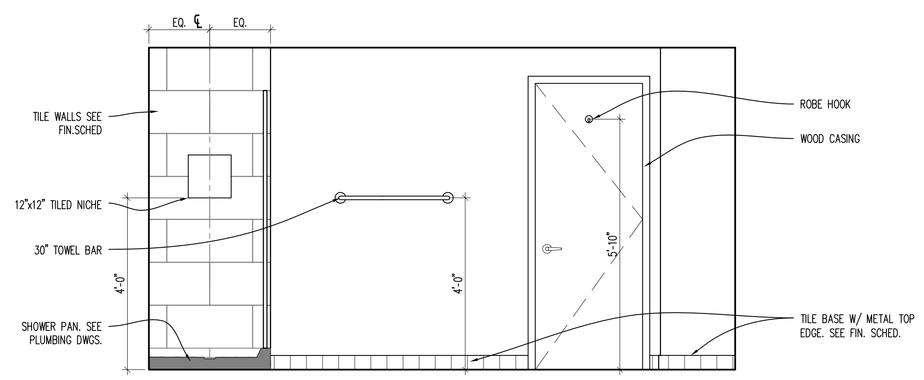

ELEVATION
SCALE: 1/2" = 1'-0" (3 / A308.1)

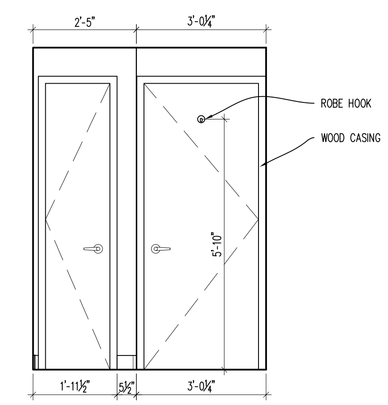

ELEVATION
SCALE: 1/2" = 1'-0" (4 / A308.1)

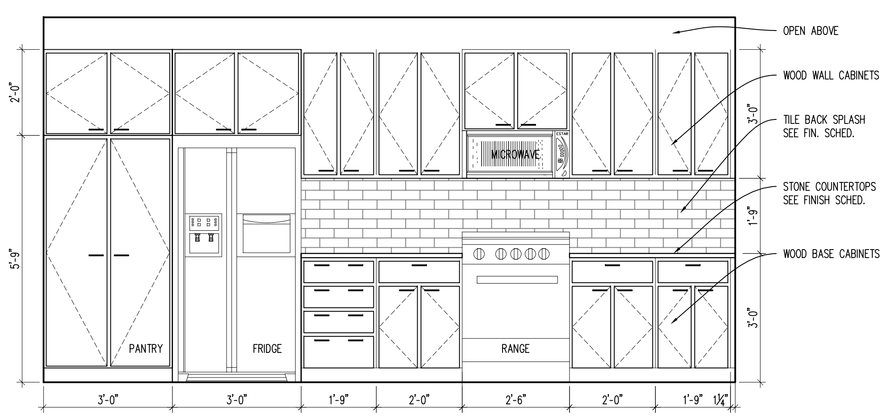

ELEVATION
SCALE: 1/2" = 1'-0" (5 / A308.1)

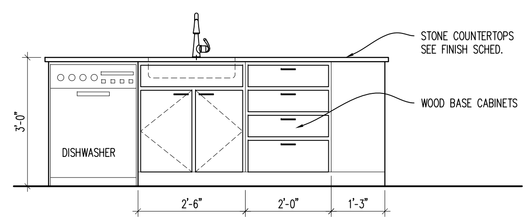

ELEVATION
SCALE: 1/2" = 1'-0" (6 / A308.1)

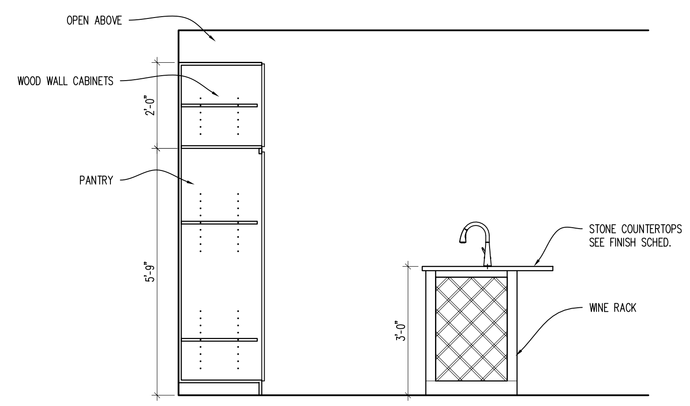

ELEVATION
SCALE: 1/2" = 1'-0" (7 / A308.1)

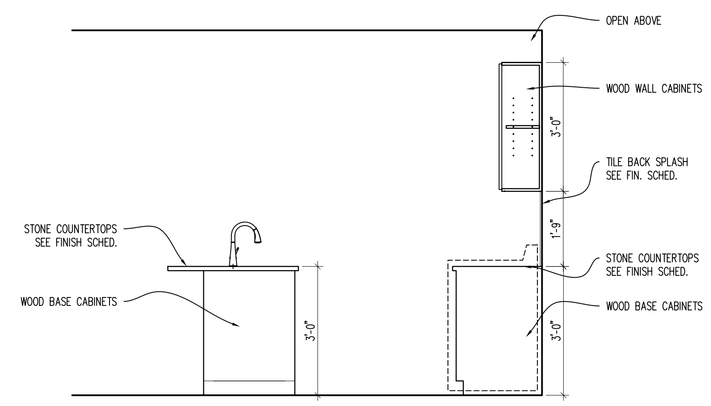

ELEVATION
SCALE: 1/2" = 1'-0" (8 / A308.1)

APARTMENT ROOM FINISH SCHEDULE

ROOM NAME	FLOOR	BASE	WALLS NORTH	WALLS SOUTH	WALLS EAST	WALLS WEST	CEILING	REMARKS	REV. NO.
LIVING AREA	VP-1	RB-3	PT-1	PT-1	PT-1	PT-1	PT-3	NOTES: A	
KITCHEN	VP-1	RB-3	PT-1	PT-1	PT-1	PT-1	PT-3	NOTES: A	
WALK-IN CLOSET	VP-1	RB-3	PT-1	PT-1	PT-1	PT-1	PT-3	NOTES: A	
BEDROOM	VP-1	RB-3	PT-1	PT-1	PT-1	PT-1	PT-3	NOTES: A	
BATHROOM	VP-1	RB-3	PT-1	PT-1	PT-1	PT-1	PT-3	NOTES: A	
FOYER / CORRIDOR	VP-1	RB-3	PT-1	PT-1	PT-1	PT-1	PT-3	NOTES: A	
WALK-IN CLOSET	VP-1	RB-3	PT-1	PT-1	PT-1	PT-1	PT-3	NOTES: A	
LAUNDRY	VP-1	RB-3	PT-1	PT-1	PT-1	PT-1	PT-3	NOTES: A	
LINEN	VP-1	RB-3	PT-1	PT-1	PT-1	PT-1	PT-3	NOTES: A	

NOTES:
A. ALL TRIM, CASINGS, DOORS, ETC ARE TO BE PAINTED. COLOR & SHEEN TBD.

APARTMENT DOOR SCHEDULE

DOOR MARK	DOOR LOCATION	DOOR INFORMATION SIZE WIDTH	HEIGHT	THICK	STYLE	DOOR MATERIAL	FRAME INFORMATION TYPE	FRAME MATERIAL	DETAIL HEAD	JAMB	OTHER	HDW. SET	FIRE RATING	REMARKS
D BTH (x2)	BATHROOM	2'-8"	6'-8"	1 3/8"	2	OAK	A	WD	5/A600	6/A600	–	2	–	PRE-HUNG. STAINED
D C (x2)	WALK-IN CLOSET	2'-6"	6'-8"	1 3/8"	2	OAK	A	WD	5/A600	6/A600	–	3	–	PRE-HUNG. STAINED
D L (x1)	LAUNDRY	(3'-0"x2) 6'-0"	6'-8"	1 3/8"	2	OAK	A	WD	5/A600	6/A600	–	4	–	PRE-HUNG. STAINED
D LI (x1)	LINEN	1'-6"	6'-8"	1 3/8"	2	OAK	A	WD	5/A600	6/A600	–	3	–	PRE-HUNG. STAINED

STATE OF OHIO JOSEPH A. BODKIN 813567 REGISTERED ARCHITECT
Joseph A. Bodkin, License #813567
Expiration Date: 12.31.2023

modelgroup
DEVELOPMENT • CONSTRUCTION • MANAGEMENT
1826 Race Street
Cincinnati, Ohio 45202
513.559.0048

Formica Building

Office/Apartments
Auditor Address: 115 E. 5th Street, Actual Address: 120 E. 4th Street
Cincinnati OH 45202

No.	Revisions	Date
1	ENG CHC #1	11.14.2022

Project: Formica Building
115 E 5th Street
Cincinnati, Ohio 45202
Sheet: LIVE 1 – 11th Construction
Project No: 2022_259
Scale: As Noted
Drawn
Checked
Issue Date

A308.1

APPROVED
CIN BD
2022P03573
02/01/23
cityof CINCINNATI BUILDINGS & INSPECTIONS
C:\Users\jbodkin\Dropbox\01-JABDC Projects\2022_Formica Building\Revit\Formica_A300 - Floors 11-12.dwg-A308.1 - L11 Plot Date/Time: Nov 15, 2022-8:19am - By: jbodkin

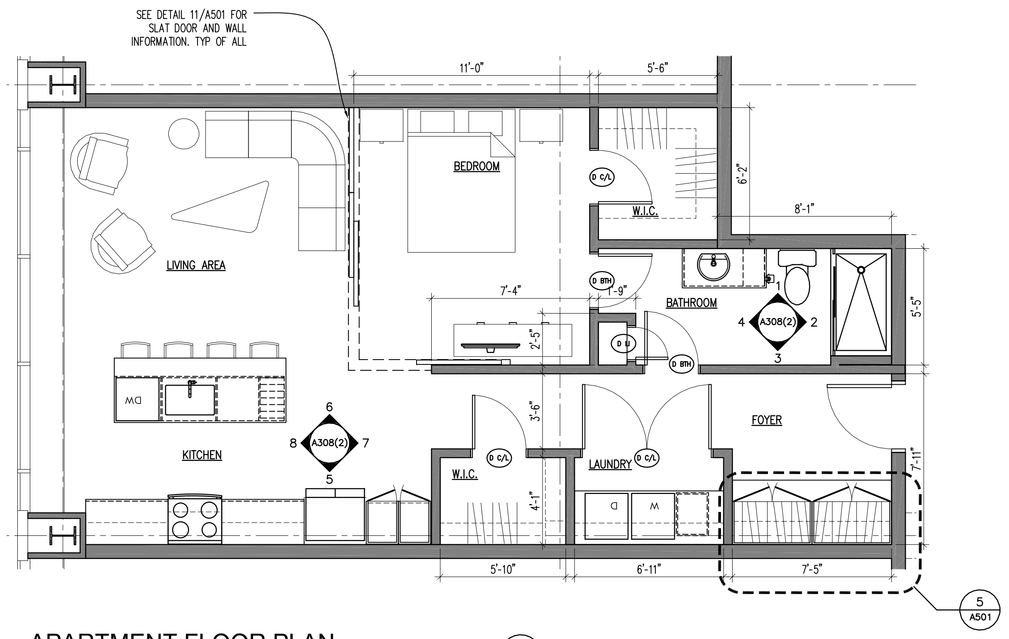

APARTMENT FLOOR PLAN
SCALE: 1/4" = 1'-0"
1 A308.2

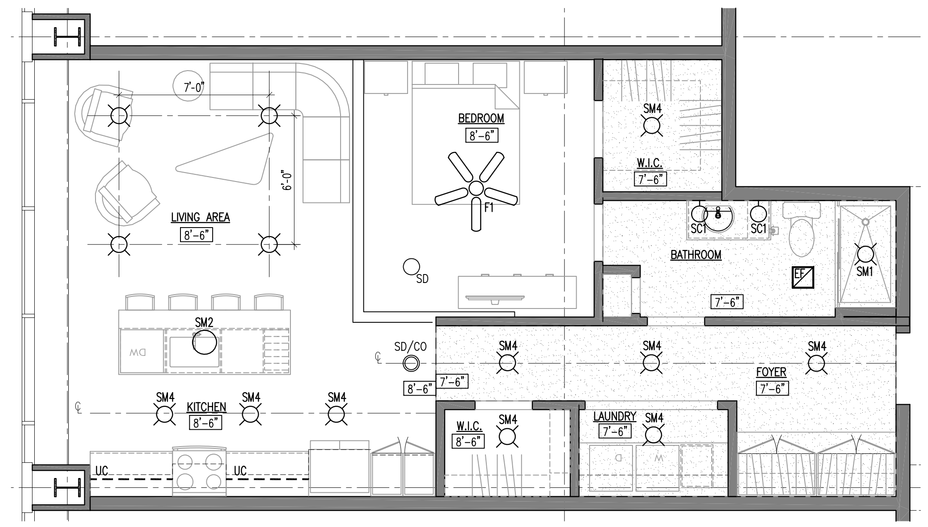

APARTMENT REFLECTED CEILING PLAN
SCALE: 1/4" = 1'-0"
2 A308.2

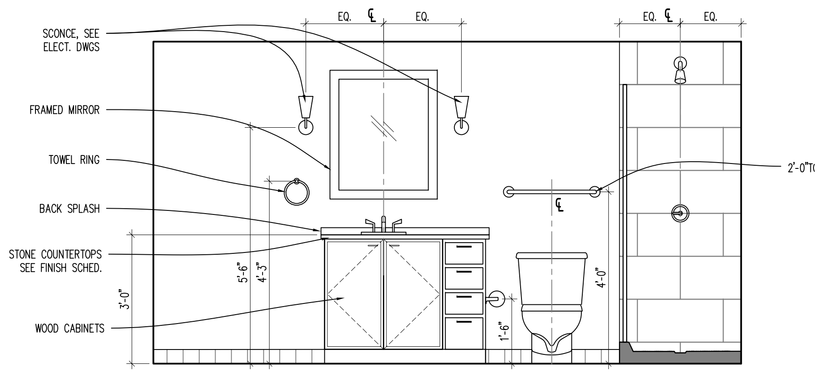

ELEVATION
SCALE: 1/2" = 1'-0"
1 A308.2

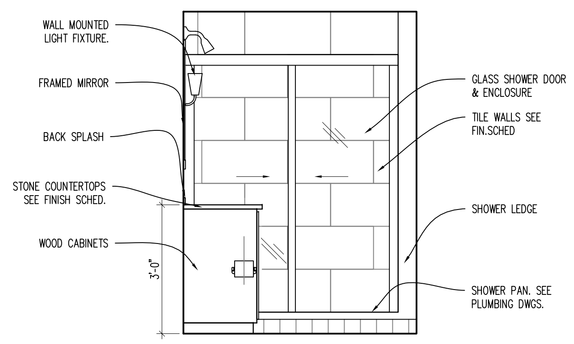

ELEVATION
SCALE: 1/2" = 1'-0"
2 A308.2

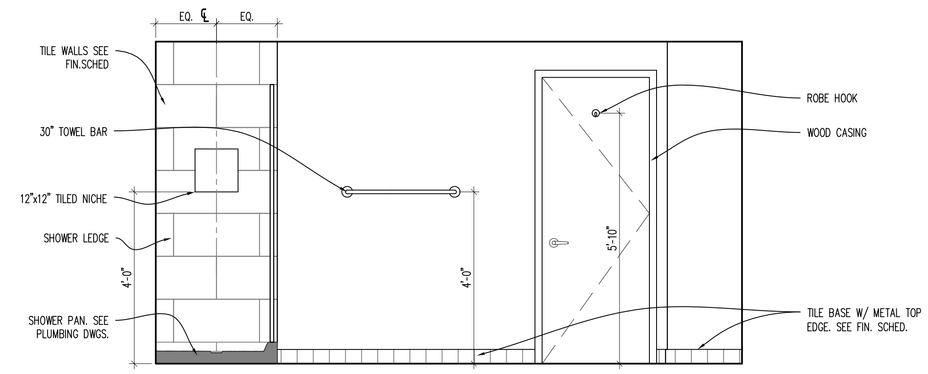

ELEVATION
SCALE: 1/2" = 1'-0"
3 A308.2

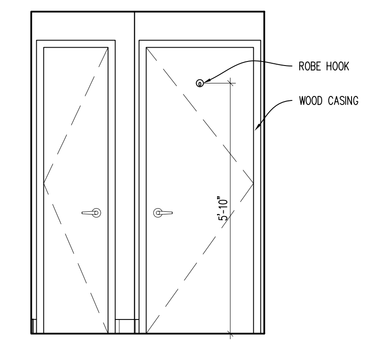

ELEVATION
SCALE: 1/2" = 1'-0"
4 A308.2

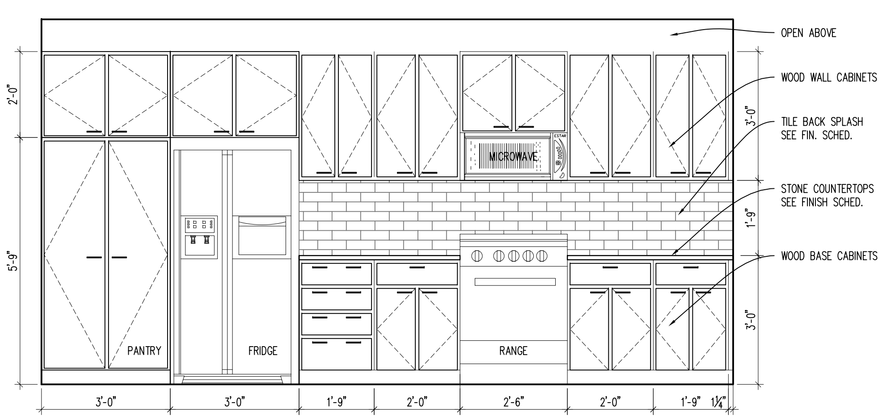

ELEVATION
SCALE: 1/2" = 1'-0"
5 A308.2

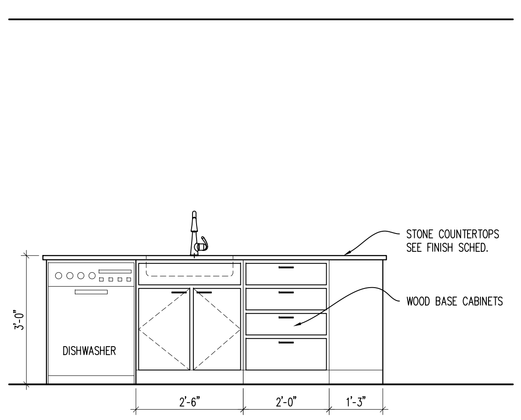

ELEVATION
SCALE: 1/2" = 1'-0"
6 A308.2

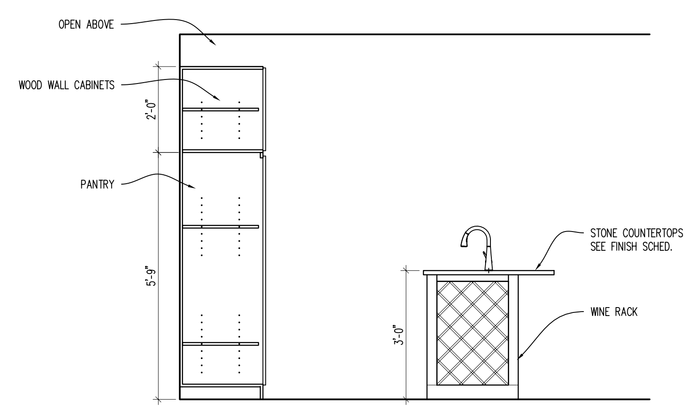

ELEVATION
SCALE: 1/2" = 1'-0"
7 A308.2

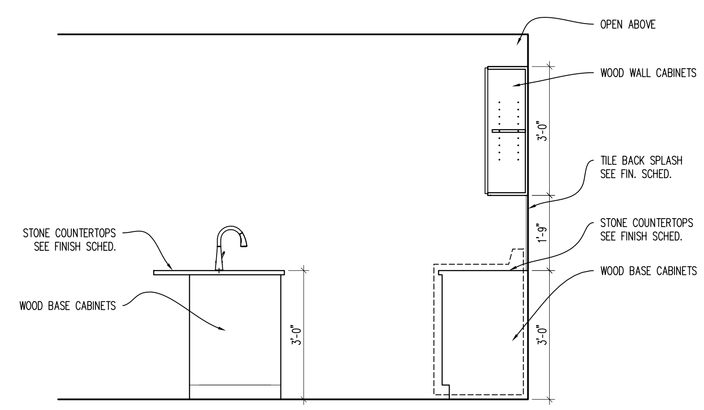

ELEVATION
SCALE: 1/2" = 1'-0"
8 A308.2

GENERAL APARTMENT NOTES

A. DOOR FRAME SHALL BE 4" FROM FACE OF WALL TO BACKSIDE OF FRAME U.N.O.
B. ALL NEW UNIT PARTITIONS ARE TYPE 3 U.N.O.
C. DIMENSIONS ARE FROM FINISH FACE OF WALL TO FINISH FACE OF WALL U.N.O.
D. CENTER ALL CLOSET DOORS ON CLOSETS U.N.O.
E. ALL LIGHTING FOR REFERENCE ONLY.
F. ALL CABINET DRAWINGS ARE FOR DESIGN INTENT ONLY. CABINET MAKER TO SUBMIT DETAILED SHOP DRAWINGS FOR REVIEW. BASIS OF DESIGN ARE SMART CABINETS
I. ALL VISIBLE SIDES OF CABINETS ARE TO RECEIVE A FINISHED PANEL THAT MATCHES THE CABINETS. THIS INCLUDES CABINETS THAT ARE UP AGAINST THE RADIATORS AND/OR FACING THE WINDOWS. TYP OF ALL.
J. ALL APPLIANCES IN THE APARTMENT UNITS WILL BE NEW ENERGY STAR APPLIANCES.
K. PROVIDE BLOCKING FOR FUTURE GRAB BARS IN ALL UNIT BATHROOMS.
L. ALL PANTRY AND LINEN CLOSETS TO RECEIVE FIVE (5) ADJUSTABLE MELAMINE SHELVES.
M. ALL CLOSETS TO RECEIVE ONE (1) MELAMINE SHELF AND COAT ROD. U.N.O.
N. EACH SHOWER TO BE PROVIDED W/ GLASS SHOWER DOOR.
O. PROVIDE AND INSTALL IN EACH APARTMENT (2) TOWEL BARS, (1) TOILET PAPER HOLDER, (1) ROBE HOOK.

APARTMENT ROOM FINISH SCHEDULE

ROOM NAME	FLOOR	BASE	WALLS NORTH	WALLS SOUTH	WALLS EAST	WALLS WEST	CEILING	REMARKS	REV. NO.
LIVING AREA	VP-1	RB-3	PT-1	PT-1	PT-1	PT-1	PT-3	NOTES: A	
KITCHEN	VP-1	RB-3	PT-1	PT-1	PT-1	PT-1	PT-3	NOTES: A	
WALK-IN CLOSET	VP-1	RB-3	PT-1	PT-1	PT-1	PT-1	PT-3	NOTES: A	
BEDROOM	VP-1	RB-3	PT-1	PT-1	PT-1	PT-1	PT-3	NOTES: A	
BATHROOM	VP-1	RB-3	PT-1	PT-1	PT-1	PT-1	PT-3	NOTES: A	
FOYER / CORRIDOR	VP-1	RB-3	PT-1	PT-1	PT-1	PT-1	PT-3	NOTES: A	
WALK-IN CLOSET	VP-1	RB-3	PT-1	PT-1	PT-1	PT-1	PT-3	NOTES: A	
LAUNDRY	VP-1	RB-3	PT-1	PT-1	PT-1	PT-1	PT-3	NOTES: A	
LINEN	VP-1	RB-3	PT-1	PT-1	PT-1	PT-1	PT-3	NOTES: A	

NOTES:
A. ALL TRIM, CASINGS, DOORS, ETC ARE TO BE PAINTED. COLOR & SHEEN TBD.

APARTMENT DOOR SCHEDULE

DOOR MARK	DOOR LOCATION	DOOR INFORMATION SIZE WIDTH	HEIGHT	THICK	STYLE	DOOR MATERIAL	FRAME INFORMATION TYPE	FRAME MATERIAL	DETAIL HEAD	JAMB	OTHER	HDW. SET	FIRE RATING	REMARKS
D BTH (x2)	BATHROOM	2'-8"	6'-8"	1 3/8"	2	OAK	A	WD	5/A600	6/A600	–	2	–	PRE-HUNG. STAINED
D C (x2)	WALK-IN CLOSET	2'-6"	6'-8"	1 3/8"	2	OAK	A	WD	5/A600	6/A600	–	3	–	PRE-HUNG. STAINED
D L (x1)	LAUNDRY	(3'-0"x2) 6'-0"	6'-8"	1 3/8"	2	OAK	A	WD	5/A600	6/A600	–	4	–	PRE-HUNG. STAINED
D LI (x1)	LINEN	1'-6"	6'-8"	1 3/8"	2	OAK	A	WD	5/A600	6/A600	–	3	–	PRE-HUNG. STAINED

STATE OF OHIO JOSEPH A. BODKIN 313567 REGISTERED ARCHITECT
Joseph A. Bodkin, License #313567
Expiration Date: 12.31.2023

model group
DEVELOPMENT • CONSTRUCTION • MANAGEMENT
1826 Race Street
Cincinnati, Ohio 45202
513.559.0048

Formica Building

Office/Apartments
Auditor Address: 115 E. 5th Street, Actual Address: 120 E. 4th Street
Cincinnati OH 45202

No.	Revisions	Date
1	ENG CHG #1	11.14.2022

Project: Formica Building
115 E 5th Street
Cincinnati, Ohio 45202
Sheet: Unit I
Construction
Project No: 2022_259
Issue Date
Scale: As Noted
Drawn
Checked

A308.2

APPROVED
CIN BD
2022P03573
02/01/23

cityof CINCINNATI BUILDINGS & INSPECTIONS

C:\Users\jbodkin\Dropbox\01-JeBDC Projects\2022\Formica\Revit\Formica_A300 - Floors 11-12.dwg=A308.2 -L Plot Date/Time: Nov 15, 2022-8:21pm - By: jbodkin

GENERAL APARTMENT NOTES

A. DOOR FRAME SHALL BE 4" FROM FACE OF WALL TO BACKSIDE OF FRAME U.N.O.
B. ALL NEW UNIT PARTITIONS ARE TYPE 3 U.N.O.
C. DIMENSIONS ARE FROM FINISH FACE OF WALL TO FINISH FACE OF WALL U.N.O.
D. CENTER ALL CLOSET DOORS ON CLOSETS U.N.O.
E. ALL LIGHTING FOR REFERENCE ONLY.
F. ALL CABINET DRAWINGS ARE FOR DESIGN INTENT ONLY. CABINET MAKER TO SUBMIT DETAILED SHOP DRAWINGS FOR REVIEW. BASIS OF DESIGN ARE SMART CABINETS
I. ALL VISIBLE SIDES OF CABINETS ARE TO RECEIVE A FINISHED PANEL THAT MATCHES THE CABINETS. THIS INCLUDES CABINETS THAT ARE UP AGAINST THE RADIATORS AND/OR FACING THE WINDOWS. TYP OF ALL.
J. ALL APPLIANCES IN THE APARTMENT UNITS WILL BE NEW ENERGY STAR APPLIANCES.
K. PROVIDE BLOCKING FOR FUTURE GRAB BARS IN ALL UNIT BATHROOMS.
L. ALL PANTRY AND LINEN CLOSETS TO RECEIVE FIVE (5) ADJUSTABLE MELAMINE SHELVES.
M. ALL CLOSETS TO RECEIVE ONE (1) MELAMINE SHELF AND COAT ROD. U.N.O.
N. EACH SHOWER TO BE PROVIDED W/ GLASS SHOWER DOOR.
O. PROVIDE AND INSTALL IN EACH APARTMENT (2) TOWEL BARS, (1) TOILET PAPER HOLDER, (1) ROBE HOOK.

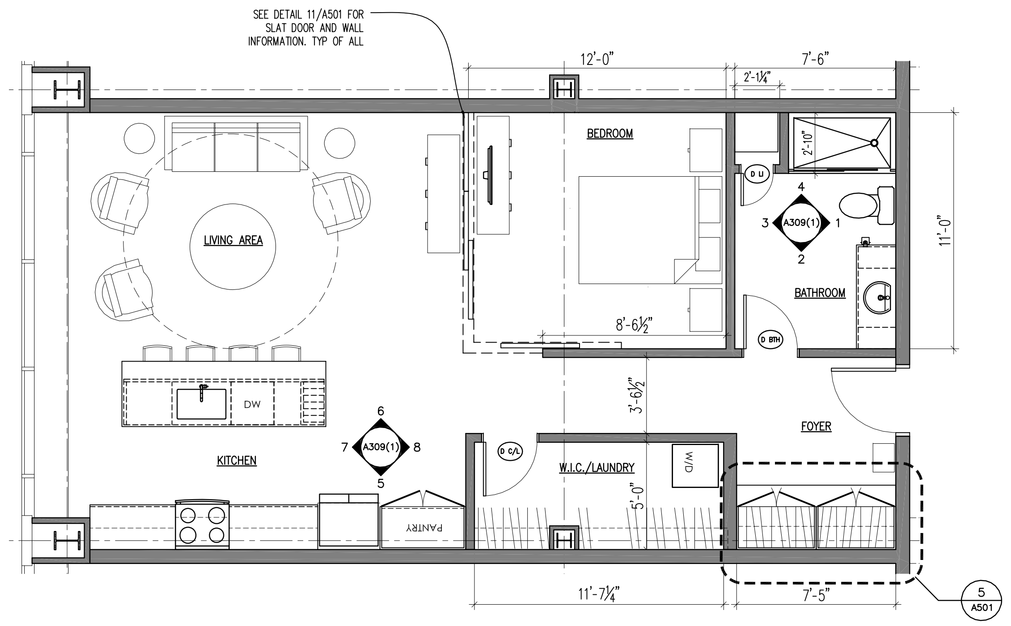

APARTMENT FLOOR PLAN
SCALE: 1/4" = 1'-0" (1 / A309.1)

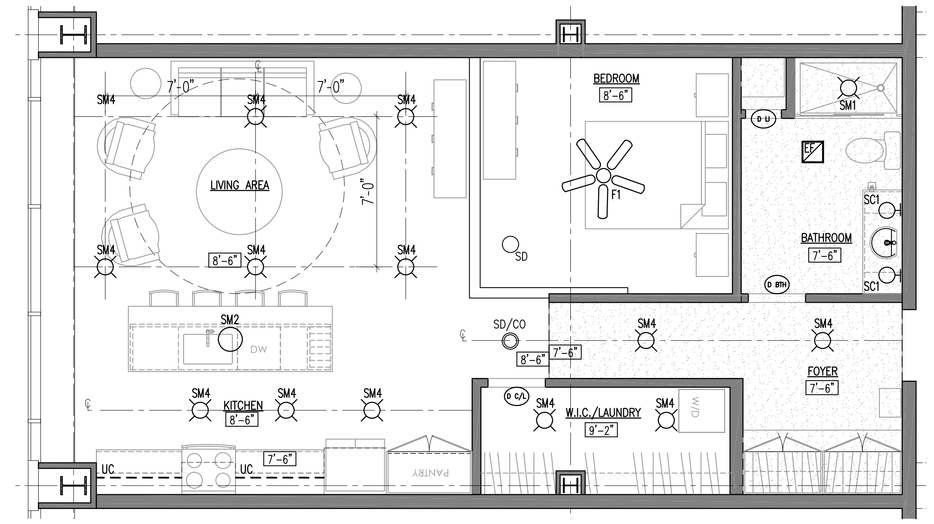

APARTMENT REFLECTED CEILING PLAN
SCALE: 1/4" = 1'-0" (2 / A309.1)

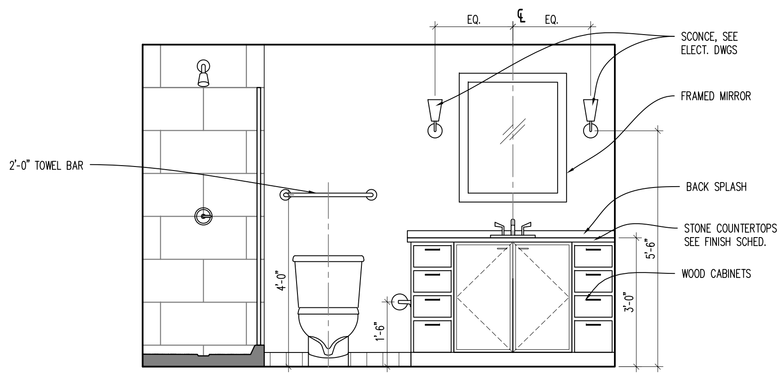

ELEVATION
SCALE: 1/2" = 1'-0" (1 / A309.1)

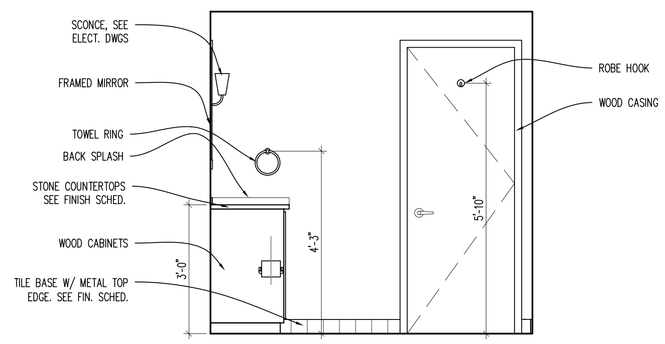

ELEVATION
SCALE: 1/2" = 1'-0" (2 / A309.1)

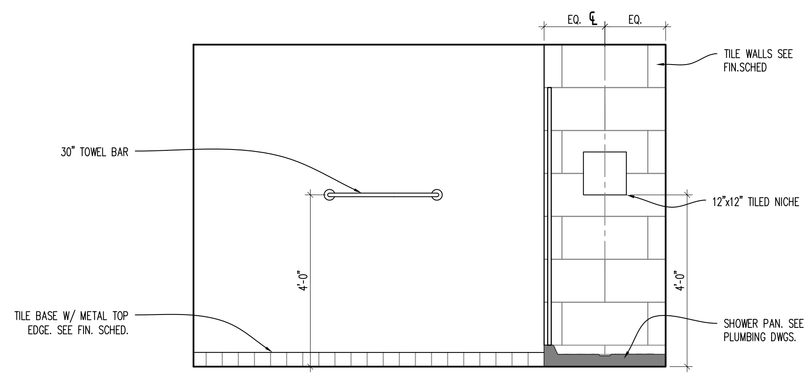

ELEVATION
SCALE: 1/2" = 1'-0" (3 / A309.1)

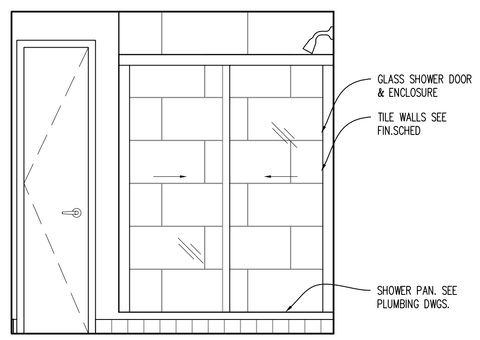

ELEVATION
SCALE: 1/2" = 1'-0" (4 / A309.1)

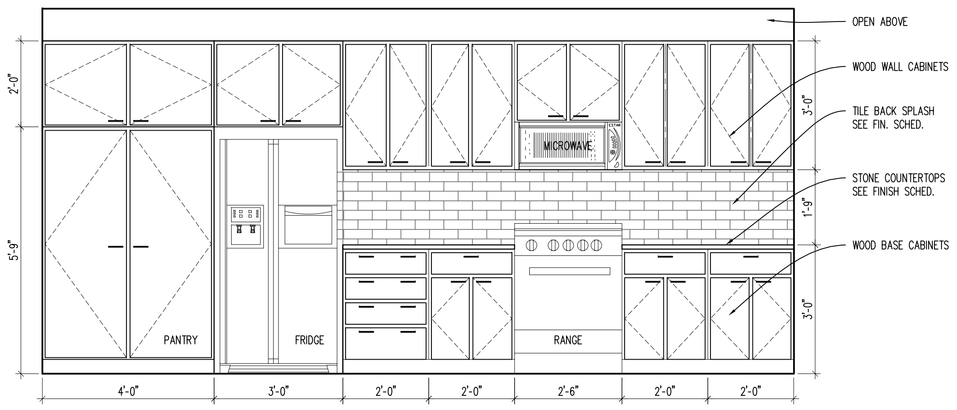

ELEVATION
SCALE: 1/2" = 1'-0" (5 / A309.1)

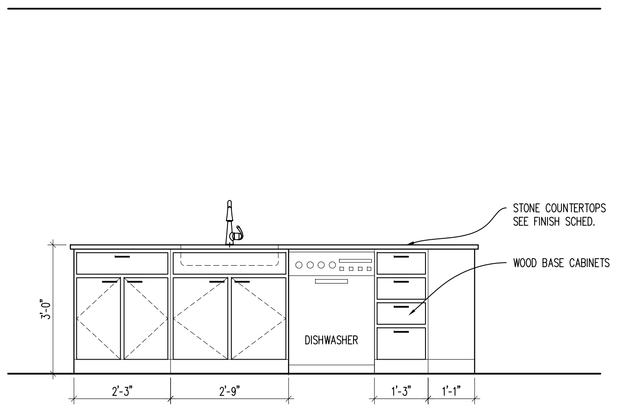

ELEVATION
SCALE: 1/2" = 1'-0" (6 / A309.1)

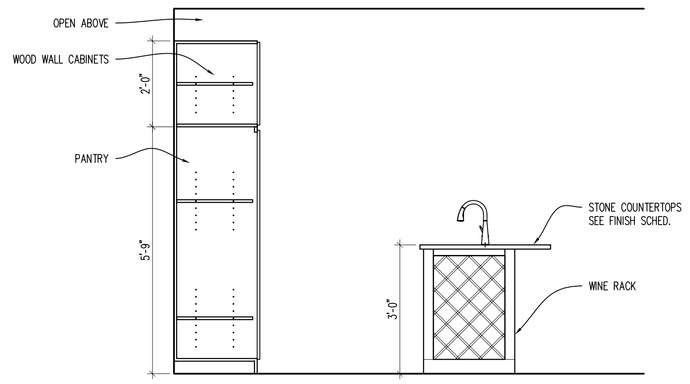

ELEVATION
SCALE: 1/2" = 1'-0" (7 / A309.1)

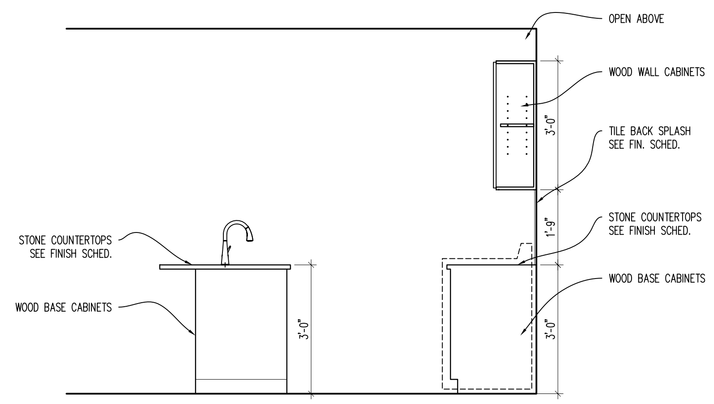

ELEVATION
SCALE: 1/2" = 1'-0" (8 / A309.1)

APARTMENT ROOM FINISH SCHEDULE

ROOM NAME	FLOOR	BASE	WALLS NORTH	WALLS SOUTH	WALLS EAST	WALLS WEST	CEILING	REMARKS	REV. NO.
LIVING AREA	VP-1	RB-3	PT-1	PT-1	PT-1	PT-1	PT-3	NOTES: A	
KITCHEN	VP-1	RB-3	PT-1	PT-1	PT-1	PT-1	PT-3	NOTES: A	
CLOSET / LAUNDRY	VP-1	RB-3	PT-1	PT-1	PT-1	PT-1	PT-3	NOTES: A	
BEDROOM	VP-1	RB-3	PT-1	PT-1	PT-1	PT-1	PT-3	NOTES: A	
BATHROOM	VP-1	RB-3	PT-1	PT-1	PT-1	PT-1	PT-3	NOTES: A	
FOYER / CORRIDOR	VP-1	RB-3	PT-1	PT-1	PT-1	PT-1	PT-3	NOTES: A	
LINEN	VP-1	RB-3	PT-1	PT-1	PT-1	PT-1	PT-3	NOTES: A	

NOTES:
A. ALL TRIM, CASINGS, DOORS, ETC ARE TO BE PAINTED. COLOR & SHEEN TBD.

APARTMENT DOOR SCHEDULE

DOOR MARK	DOOR LOCATION	DOOR INFORMATION SIZE WIDTH	HEIGHT	THICK	STYLE	DOOR MATERIAL	FRAME INFORMATION TYPE	FRAME MATERIAL	DETAIL HEAD	JAMB	OTHER	HDW. SET	FIRE RATING	REMARKS
D BTH (x1)	BATHROOM	2'-8"	6'-8"	1 3/8"	2	OAK	A	WD	5/A600	6/A600	–	2	–	PRE-HUNG. STAINED
D C/L (x1)	CLOSET / LAUNDRY	2'-6"	6'-8"	1 3/8"	2	OAK	A	WD	5/A600	6/A600	–	3	–	PRE-HUNG. STAINED
D LI (x1)	LINEN	1'-6"	6'-8"	1 3/8"	2	OAK	A	WD	5/A600	6/A600	–	3	–	PRE-HUNG. STAINED

STATE OF OHIO JOSEPH A. BODKIN 813567 REGISTERED ARCHITECT
Joseph A. Bodkin, License #813567
Expiration Date: 12.31.2023

modelgroup
DEVELOPMENT • CONSTRUCTION • MANAGEMENT
1826 Race Street
Cincinnati, Ohio 45202
513.559.0048

Formica Building

Office/Apartments
Auditor Address: 115 E. 5th Street, Actual Address: 120 E. 4th Street
Cincinnati OH 45202

No.	Revisions	Date
1	ENG CHG #1	11.14.2022

Project: Formica Building
115 E 5th Street
Cincinnati, Ohio 45202
Sheet: LIVE J – 11th Construction
Project No: 2022_259
Scale: As Noted
Drawn
Checked
Issue Date

A309.1

APPROVED
CIN BD
2022P03573
02/01/23
cityof CINCINNATI BUILDINGS & INSPECTIONS
C:\Users\jbodkin\Dropbox\01-JMDC Projects\20-From 1st\1_PHASE C\CADs - Phase C - From 1st\03_Formica_A300 - Floors 11-12.dwg-A309.1 - J_11 Plot Date/Time: Nov 15, 2022-8:22pm By: jbodkin

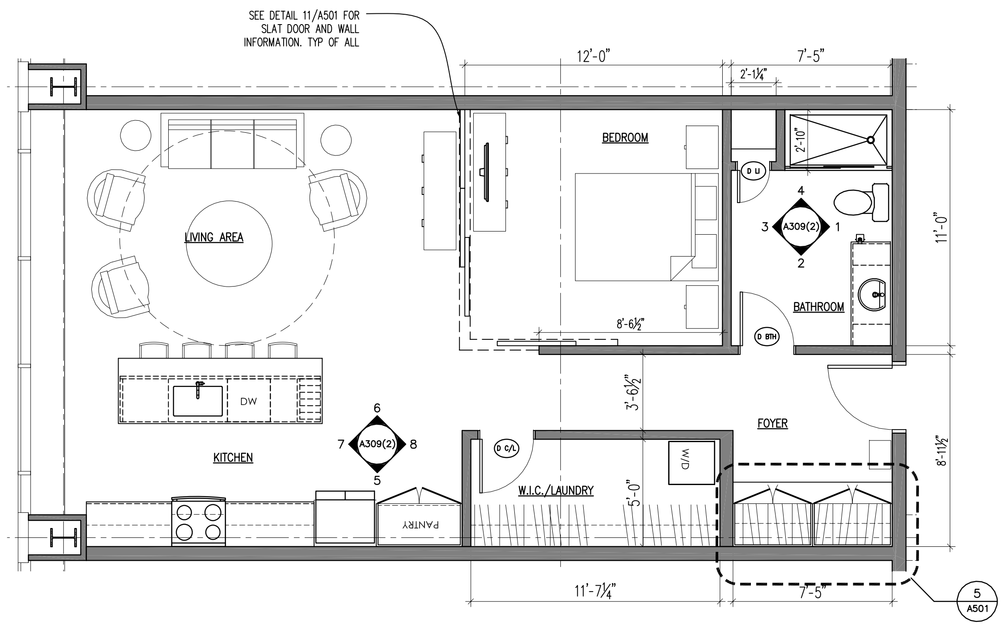

APARTMENT FLOOR PLAN (1 / A309.2)
SCALE: 1/4" = 1'-0"

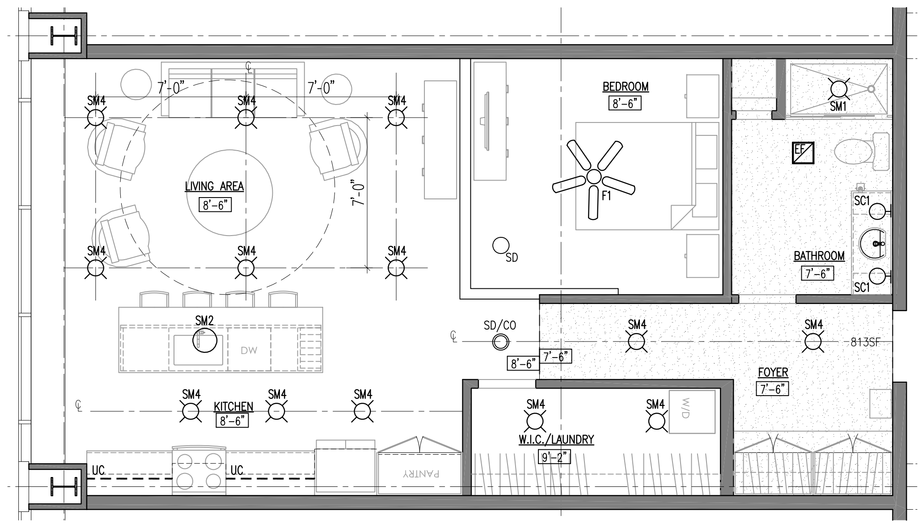

APARTMENT REFLECTED CEILING PLAN (2 / A309.2)
SCALE: 1/4" = 1'-0"

GENERAL APARTMENT NOTES

A. DOOR FRAME SHALL BE 4" FROM FACE OF WALL TO BACKSIDE OF FRAME U.N.O.
B. ALL NEW UNIT PARTITIONS ARE TYPE 3 U.N.O.
C. DIMENSIONS ARE FROM FINISH FACE OF WALL TO FINISH FACE OF WALL U.N.O.
D. CENTER ALL CLOSET DOORS ON CLOSETS U.N.O.
E. ALL LIGHTING FOR REFERENCE ONLY.
F. ALL CABINET DRAWINGS ARE FOR DESIGN INTENT ONLY. CABINET MAKER TO SUBMIT DETAILED SHOP DRAWINGS FOR REVIEW. BASIS OF DESIGN ARE SMART CABINETS
I. ALL VISIBLE SIDES OF CABINETS ARE TO RECEIVE A FINISHED PANEL THAT MATCHES THE CABINETS. THIS INCLUDES CABINETS THAT ARE UP AGAINST THE RADIATORS AND/OR FACING THE WINDOWS. TYP OF ALL.
J. ALL APPLIANCES IN THE APARTMENT UNITS WILL BE NEW ENERGY STAR APPLIANCES.
K. PROVIDE BLOCKING FOR FUTURE GRAB BARS IN ALL UNIT BATHROOMS.
L. ALL PANTRY AND LINEN CLOSETS TO RECEIVE FIVE (5) ADJUSTABLE MELAMINE SHELVES.
M. ALL CLOSETS TO RECEIVE ONE (1) MELAMINE SHELF AND COAT ROD. U.N.O.
N. EACH SHOWER TO BE PROVIDED W/ GLASS SHOWER DOOR.
O. PROVIDE AND INSTALL IN EACH APARTMENT (2) TOWEL BARS, (1) TOILET PAPER HOLDER, (1) ROBE HOOK.

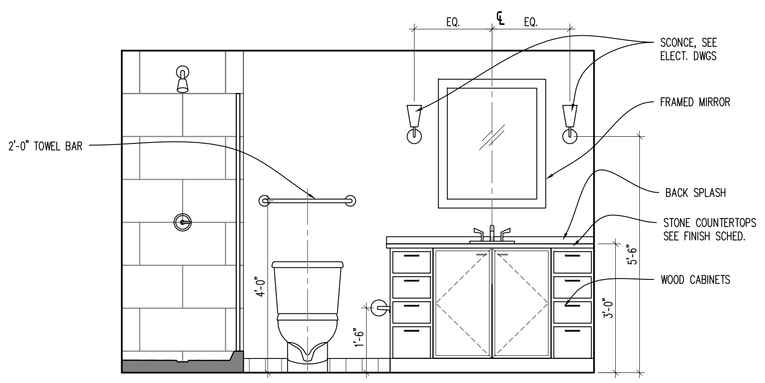

ELEVATION (1 / A309.2)
SCALE: 1/2" = 1'-0"

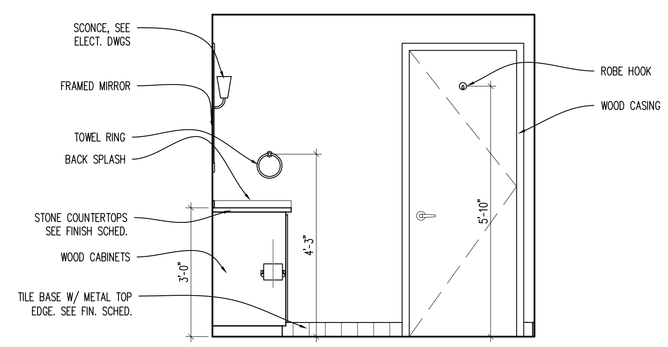

ELEVATION (2 / A309.2)
SCALE: 1/2" = 1'-0"

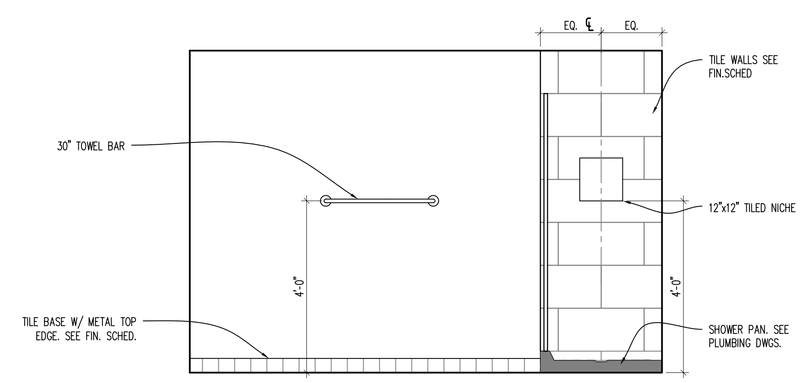

ELEVATION (3 / A309.2)
SCALE: 1/2" = 1'-0"

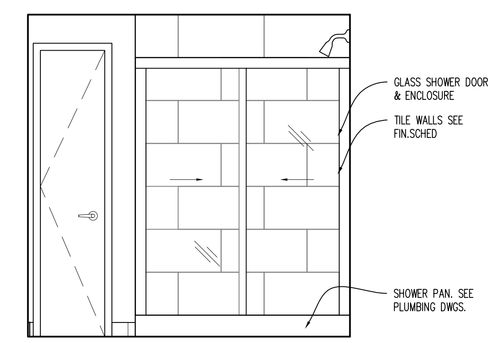

ELEVATION (4 / A309.2)
SCALE: 1/2" = 1'-0"

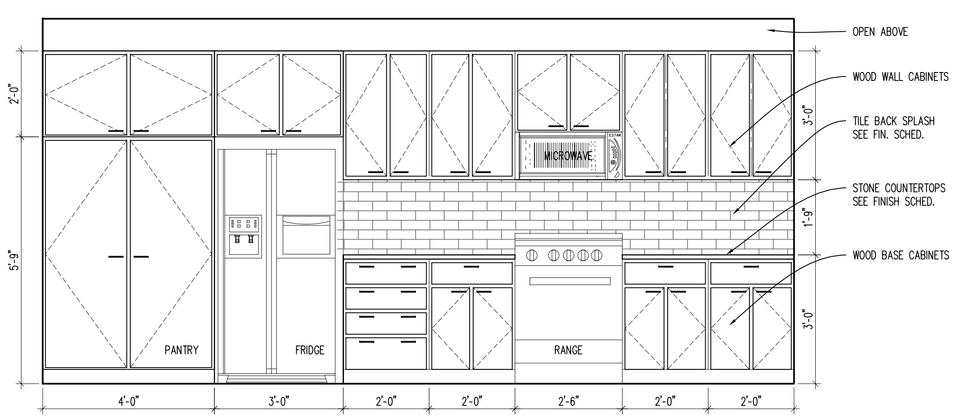

ELEVATION (5 / A309.2)
SCALE: 1/2" = 1'-0"

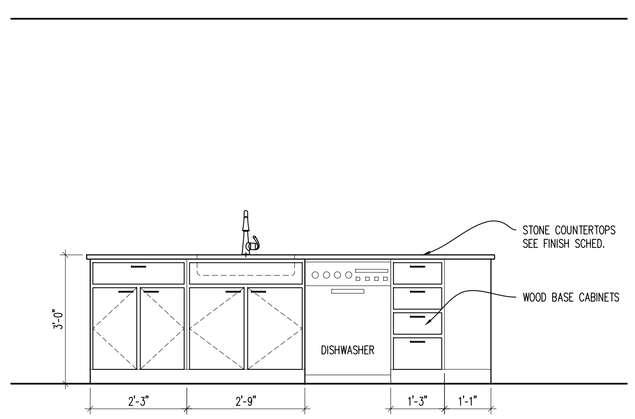

ELEVATION (6 / A309.2)
SCALE: 1/2" = 1'-0"

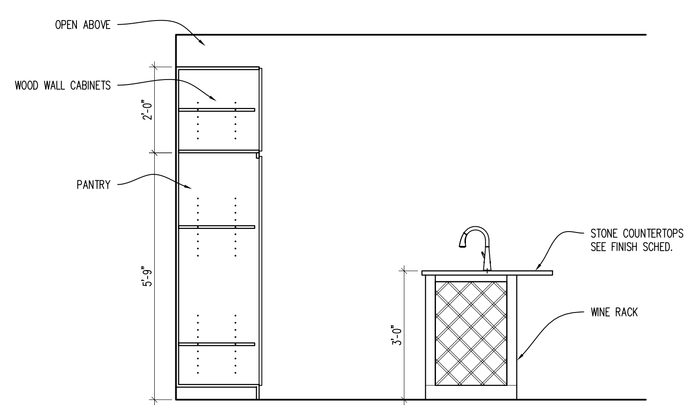

ELEVATION (7 / A309.2)
SCALE: 1/2" = 1'-0"

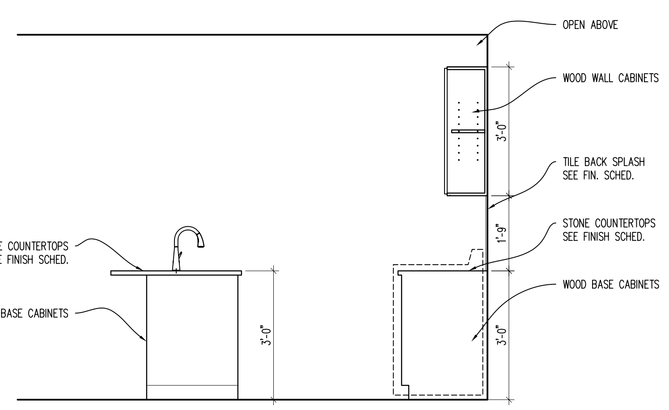

ELEVATION (8 / A309.2)
SCALE: 1/2" = 1'-0"

APARTMENT ROOM FINISH SCHEDULE

ROOM NAME	FLOOR	BASE	WALLS NORTH	WALLS SOUTH	WALLS EAST	WALLS WEST	CEILING	REMARKS	REV. NO.
LIVING AREA	VP-1	RB-3	PT-1	PT-1	PT-1	PT-1	PT-3	NOTES: A	
KITCHEN	VP-1	RB-3	PT-1	PT-1	PT-1	PT-1	PT-3	NOTES: A	
CLOSET / LAUNDRY	VP-1	RB-3	PT-1	PT-1	PT-1	PT-1	PT-3	NOTES: A	
BEDROOM	VP-1	RB-3	PT-1	PT-1	PT-1	PT-1	PT-3	NOTES: A	
BATHROOM	VP-1	RB-3	PT-1	PT-1	PT-1	PT-1	PT-3	NOTES: A	
FOYER / CORRIDOR	VP-1	RB-3	PT-1	PT-1	PT-1	PT-1	PT-3	NOTES: A	
LINEN	VP-1	RB-3	PT-1	PT-1	PT-1	PT-1	PT-3	NOTES: A	

NOTES:
A. ALL TRIM, CASINGS, DOORS, ETC ARE TO BE PAINTED. COLOR & SHEEN TBD.

APARTMENT DOOR SCHEDULE

DOOR MARK	DOOR LOCATION	DOOR INFORMATION SIZE WIDTH	HEIGHT	THICK	STYLE	DOOR MATERIAL	FRAME INFORMATION TYPE	FRAME MATERIAL	DETAIL HEAD	JAMB	OTHER	HDW. SET	FIRE RATING	REMARKS
D BTH (x1)	BATHROOM	2'-8"	6'-8"	1 3/8"	2	OAK	A	WD	5/A600	6/A600	–	2	–	PRE-HUNG. STAINED
D C/L (x1)	CLOSET / LAUNDRY	2'-6"	6'-8"	1 3/8"	2	OAK	A	WD	5/A600	6/A600	–	3	–	PRE-HUNG. STAINED
D LI (x1)	LINEN	1'-6"	6'-8"	1 3/8"	2	OAK	A	WD	5/A600	6/A600	–	3	–	PRE-HUNG. STAINED

STATE OF OHIO JOSEPH A. BODKIN 313567 REGISTERED ARCHITECT
Joseph A. Bodkin, License #313567
Expiration Date: 12.31.2023

modelgroup
DEVELOPMENT • CONSTRUCTION • MANAGEMENT
1826 Race Street
Cincinnati, Ohio 45202
513.559.0048

Formica Building

Office/Apartments
Auditor Address: 115 E. 5th Street, Actual Address: 120 E. 4th Street
Cincinnati OH 45202

No.	Revisions	Date
1	ENG CHG #1	11.14.2022

Project: Formica Building
115 E 5th Street
Cincinnati, Ohio 45202
Sheet: LUKE J
Construction
Project No: 2022_259
Scale: As Noted
Drawn
Issue Date
Checked

A309.2

APPROVED
CIN BD
2022P03573
02/01/23

cityof CINCINNATI BUILDINGS & INSPECTIONS

C:\Users\jbodkin\Dropbox\01-JABDC Projects\2022\Formica Building\Formica Building_Revit_Central_from 1ws11_PHASE C\CADs - Phase C - From 1ws11\03_Formica_A300 - Floors 11-12.dwg-A309.2 - J. Plot Date/Time: Nov 15, 2022-8:25pm - By: jbodkin

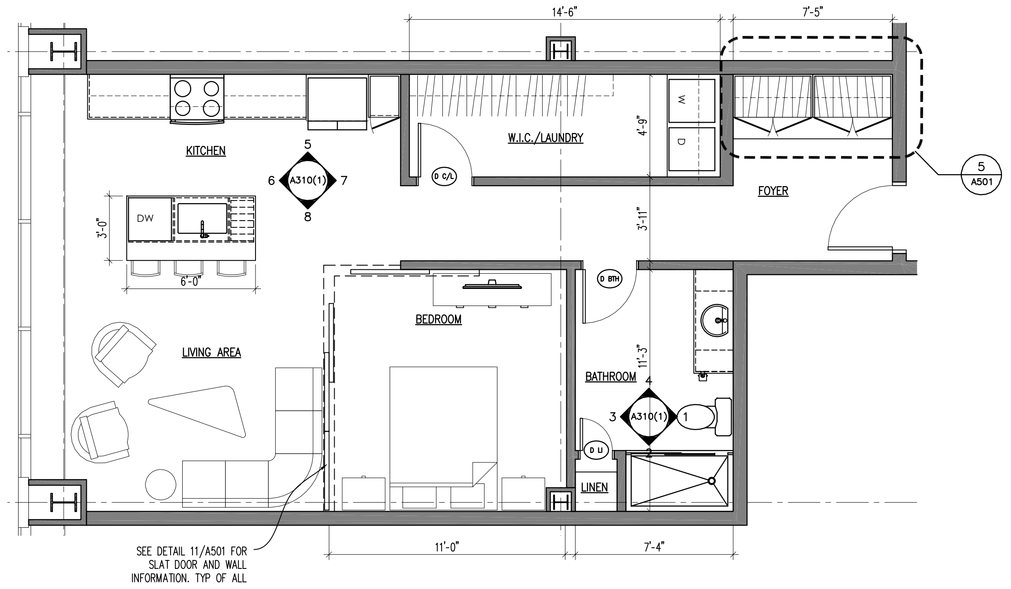

APARTMENT FLOOR PLAN
SCALE: 1/4" = 1'-0" (1 / A310.1)

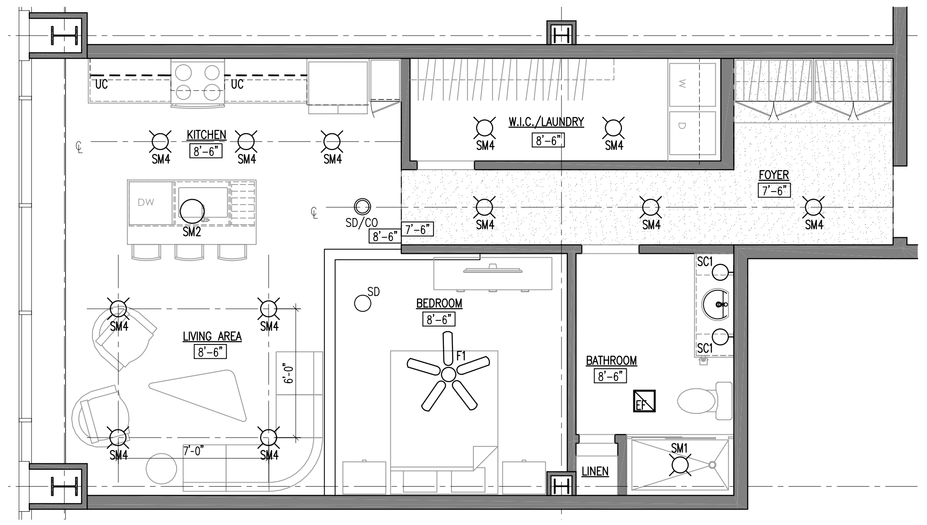

APARTMENT REFLECTED CEILING PLAN
SCALE: 1/4" = 1'-0" (2 / A310.1)

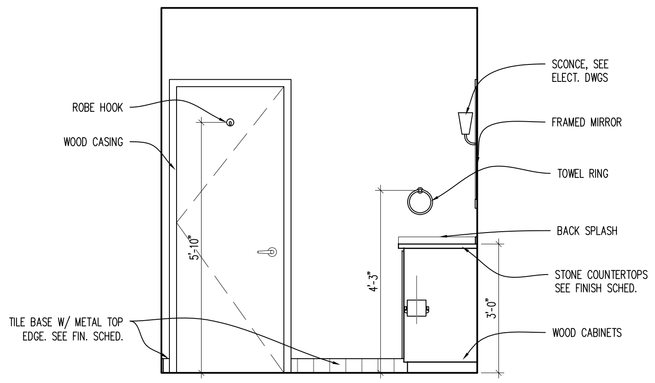

ELEVATION
SCALE: 1/2" = 1'-0" (1 / A310.1)

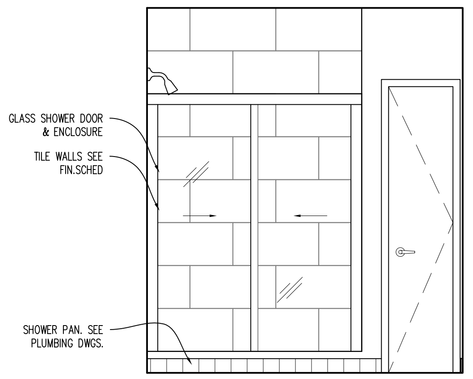

ELEVATION
SCALE: 1/2" = 1'-0" (2 / A310.1)

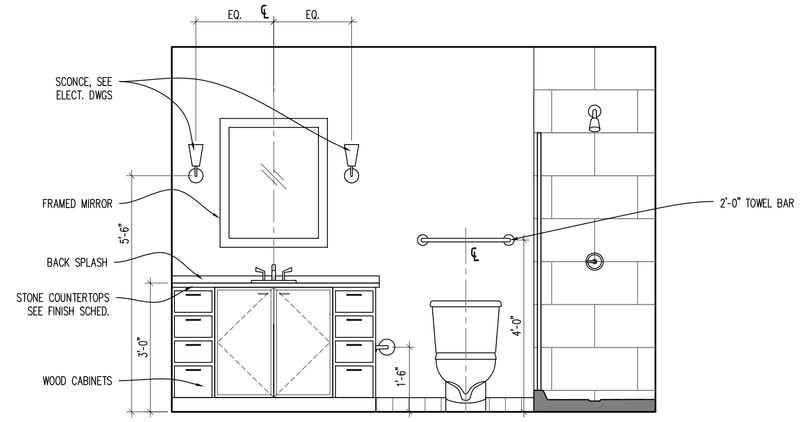

ELEVATION
SCALE: 1/2" = 1'-0" (3 / A310.1)

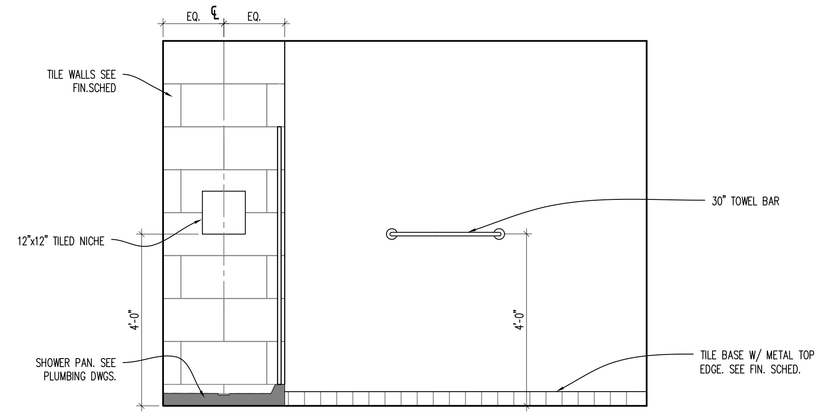

ELEVATION
SCALE: 1/2" = 1'-0" (4 / A310.1)

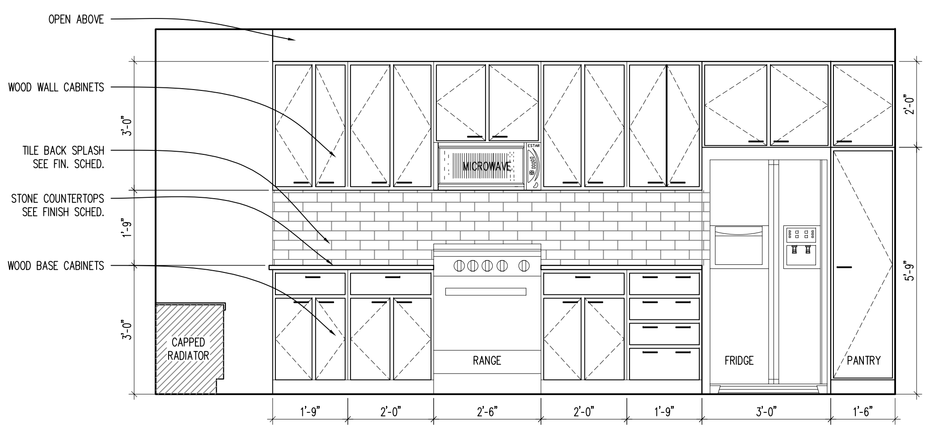

ELEVATION
SCALE: 1/2" = 1'-0" (5 / A310.1)

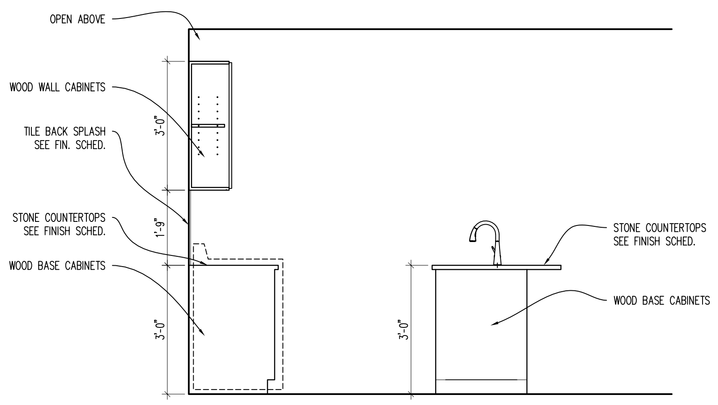

ELEVATION
SCALE: 1/2" = 1'-0" (6 / A310.1)

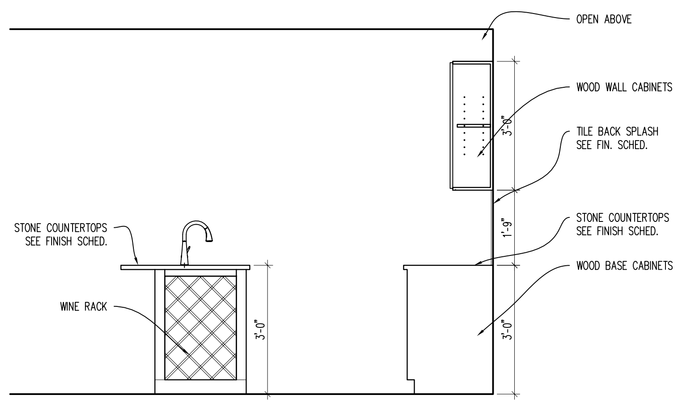

ELEVATION
SCALE: 1/2" = 1'-0" (7 / A310.1)

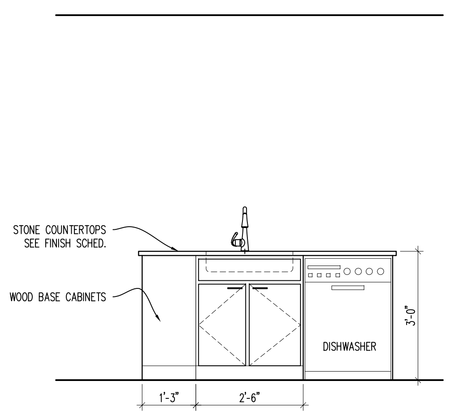

ELEVATION
SCALE: 1/2" = 1'-0" (8 / A310.1)

GENERAL APARTMENT NOTES

A. DOOR FRAME SHALL BE 4" FROM FACE OF WALL TO BACKSIDE OF FRAME U.N.O.
B. ALL NEW UNIT PARTITIONS ARE TYPE 3 U.N.O.
C. DIMENSIONS ARE FROM FINISH FACE OF WALL TO FINISH FACE OF WALL U.N.O.
D. CENTER ALL CLOSET DOORS ON CLOSETS U.N.O.
E. ALL LIGHTING FOR REFERENCE ONLY.
F. ALL CABINET DRAWINGS ARE FOR DESIGN INTENT ONLY. CABINET MAKER TO SUBMIT DETAILED SHOP DRAWINGS FOR REVIEW. BASIS OF DESIGN ARE SMART CABINETS
I. ALL VISIBLE SIDES OF CABINETS ARE TO RECEIVE A FINISHED PANEL THAT MATCHES THE CABINETS. THIS INCLUDES CABINETS THAT ARE UP AGAINST THE RADIATORS AND/OR FACING THE WINDOWS. TYP OF ALL.
J. ALL APPLIANCES IN THE APARTMENT UNITS WILL BE NEW ENERGY STAR APPLIANCES.
K. PROVIDE BLOCKING FOR FUTURE GRAB BARS IN ALL UNIT BATHROOMS.
L. ALL PANTRY AND LINEN CLOSETS TO RECEIVE FIVE (5) ADJUSTABLE MELAMINE SHELVES.
M. ALL CLOSETS TO RECEIVE ONE (1) MELAMINE SHELF AND COAT ROD. U.N.O.
N. EACH SHOWER TO BE PROVIDED W/ GLASS SHOWER DOOR.
O. PROVIDE AND INSTALL IN EACH APARTMENT (2) TOWEL BARS, (1) TOILET PAPER HOLDER, (1) ROBE HOOK.

APARTMENT ROOM FINISH SCHEDULE

ROOM NAME	FLOOR	BASE	WALLS NORTH	WALLS SOUTH	WALLS EAST	WALLS WEST	CEILING	REMARKS	REV. NO.
LIVING AREA	VP-1	RB-3	PT-1	PT-1	PT-1	PT-1	PT-3	NOTES: A	
KITCHEN	VP-1	RB-3	PT-1	PT-1	PT-1	PT-1	PT-3	NOTES: A	
CLOSET / LAUNDRY	VP-1	RB-3	PT-1	PT-1	PT-1	PT-1	PT-3	NOTES: A	
BEDROOM	VP-1	RB-3	PT-1	PT-1	PT-1	PT-1	PT-3	NOTES: A	
BATHROOM	VP-1	RB-3	PT-1	PT-1	PT-1	PT-1	PT-3	NOTES: A	
FOYER / CORRIDOR	VP-1	RB-3	PT-1	PT-1	PT-1	PT-1	PT-3	NOTES: A	
LINEN	VP-1	RB-3	PT-1	PT-1	PT-1	PT-1	PT-3	NOTES: A	

NOTES:
A. ALL TRIM, CASINGS, DOORS, ETC ARE TO BE PAINTED. COLOR & SHEEN TBD.

APARTMENT DOOR SCHEDULE

DOOR MARK	DOOR LOCATION	DOOR INFORMATION SIZE WIDTH	HEIGHT	THICK	STYLE	DOOR MATERIAL	FRAME INFORMATION TYPE	FRAME MATERIAL	DETAIL HEAD	JAMB	OTHER	HDW. SET	FIRE RATING	REMARKS
D BTH (x1)	BATHROOM	2'-8"	6'-8"	1 3/8"	2	OAK	A	WD	5/A600	6/A600	–	2	–	PRE-HUNG. STAINED
D C/L (x1)	CLOSET / LAUNDRY	2'-6"	6'-8"	1 3/8"	2	OAK	A	WD	5/A600	6/A600	–	3	–	PRE-HUNG. STAINED
D LI (x1)	LINEN	1'-6"	6'-8"	1 3/8"	2	OAK	A	WD	5/A600	6/A600	–	3	–	PRE-HUNG. STAINED

STATE OF OHIO JOSEPH A. BODKIN 8135567 REGISTERED ARCHITECT
Joseph A. Bodkin, License #8135567
Expiration Date: 12.31.2023

modelgroup
DEVELOPMENT • CONSTRUCTION • MANAGEMENT
1826 Race Street
Cincinnati, Ohio 45202
513.559.0048

Formica Building
Office/Apartments
Auditor Address: 115 E. 5th Street, Actual Address: 120 E. 4th Street
Cincinnati OH 45202

No.	Revisions	Date
A	ENG CHG #1	11.14.2022

Project: Formica Building
115 E 5th Street
Cincinnati, Ohio 45202
Set: DR K – 11th Construction
Project No: 2022_259
Scale: As Noted
Issue Date
Drawn
Checked

A310.1

APPROVED
CIN BD
2022P03573
02/01/23
cityof CINCINNATI BUILDINGS & INSPECTIONS

C:\Users\jbodkin\Desktop\01_MBDG_Projects\3.2022_From 1st\1_PHASE C\CADs – From 1st\03_Formica_A300 – Floors 11-12.dwg-A310.1 – K_11. Plot Date/Time: Nov 15, 2022-8:26am – By: jbodkin

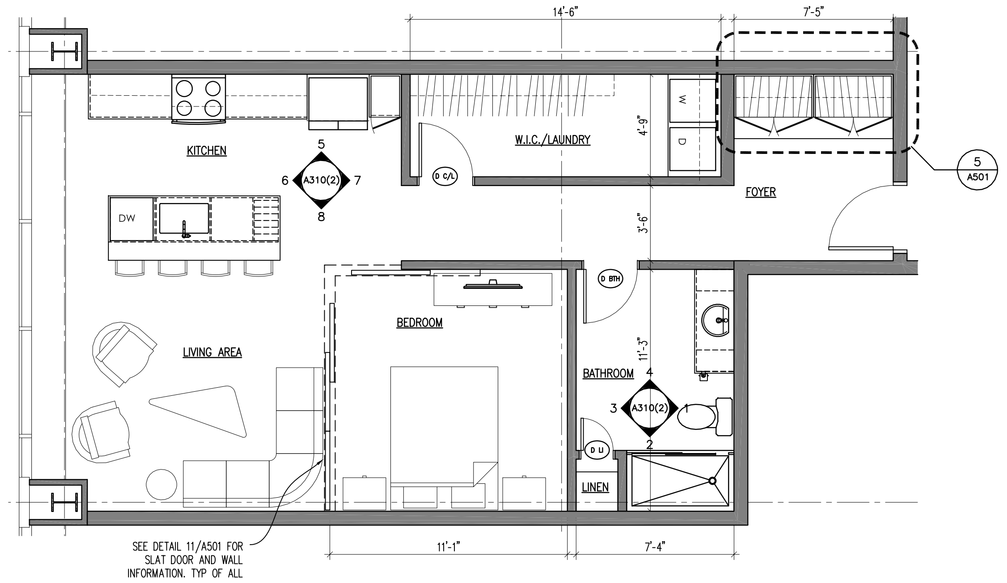

APARTMENT FLOOR PLAN
SCALE: 1/4" = 1'-0" (1 / A310.2)

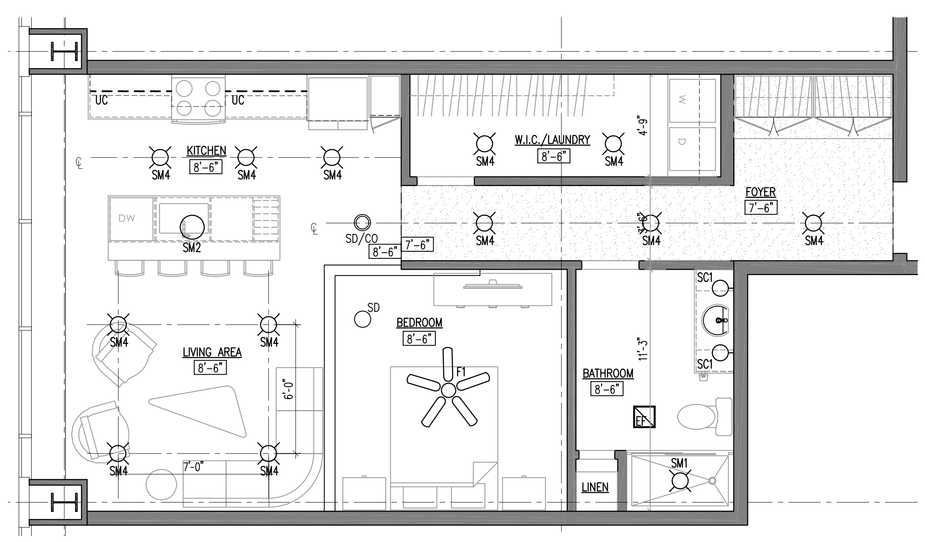

APARTMENT REFLECTED CEILING PLAN
SCALE: 1/4" = 1'-0" (2 / A310.2)

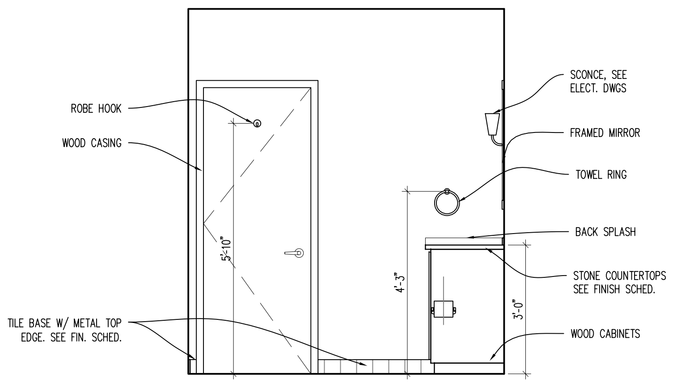

ELEVATION
SCALE: 1/2" = 1'-0" (1 / A310.2)

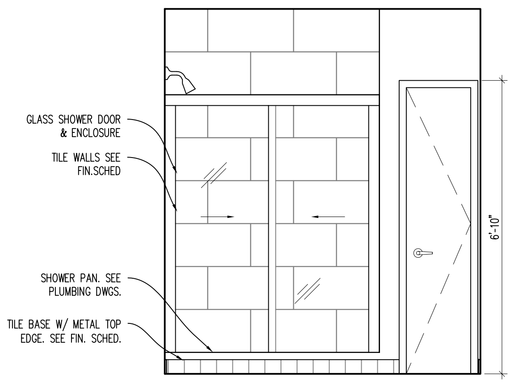

ELEVATION
SCALE: 1/2" = 1'-0" (2 / A310.2)

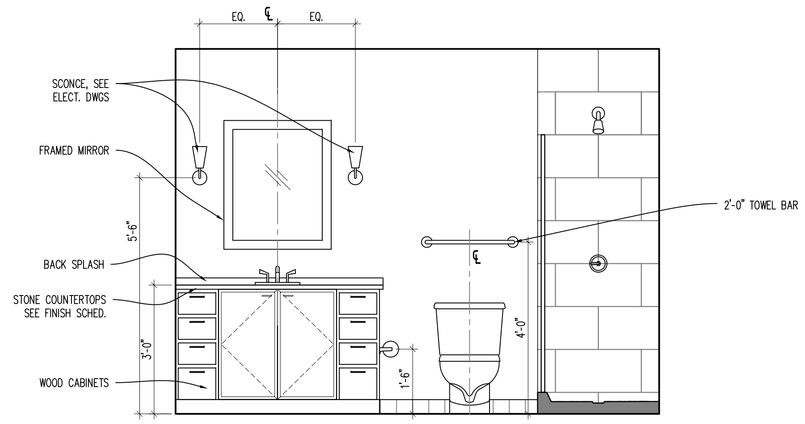

ELEVATION
SCALE: 1/2" = 1'-0" (3 / A310.2)

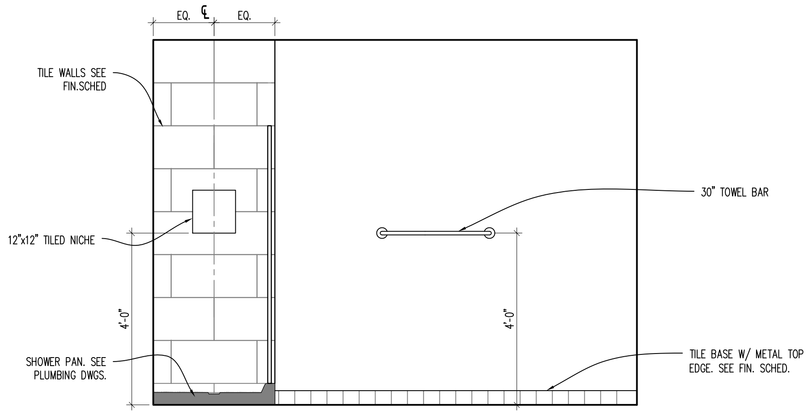

ELEVATION
SCALE: 1/2" = 1'-0" (4 / A310.2)

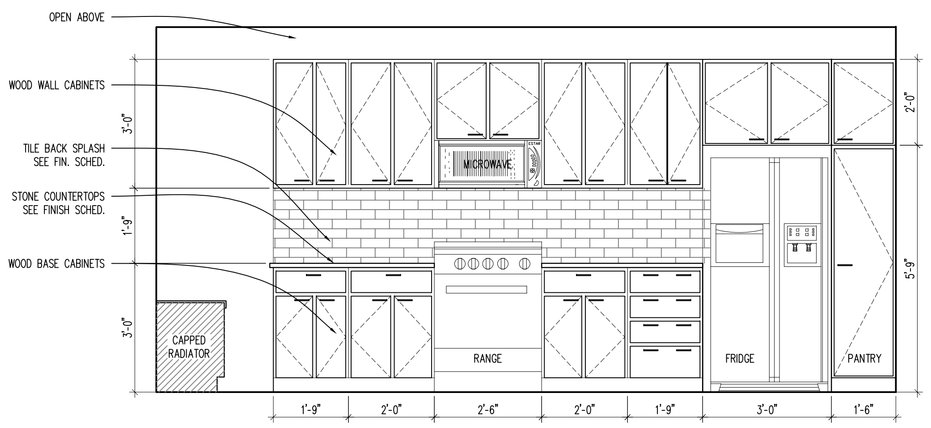

ELEVATION
SCALE: 1/2" = 1'-0" (5 / A310.2)

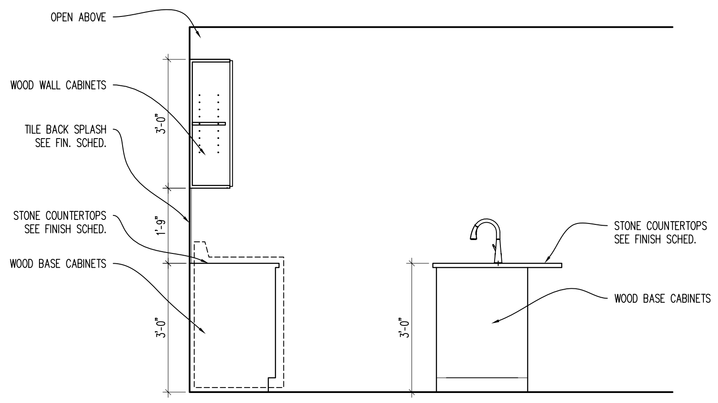

ELEVATION
SCALE: 1/2" = 1'-0" (6 / A310.2)

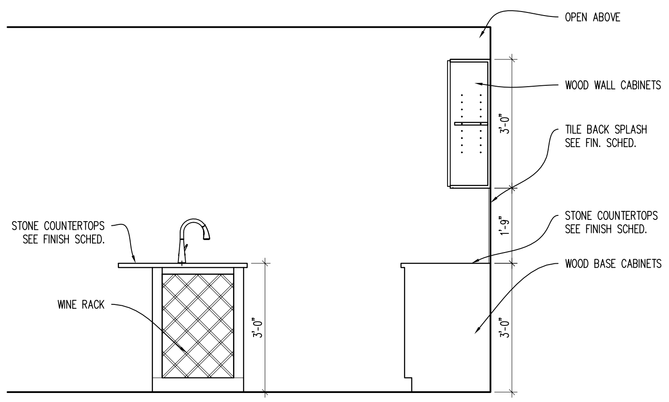

ELEVATION
SCALE: 1/2" = 1'-0" (7 / A310.2)

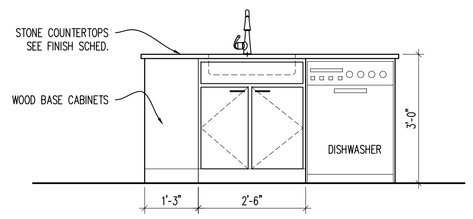

ELEVATION
SCALE: 1/2" = 1'-0" (8 / A310.2)

GENERAL APARTMENT NOTES

A. DOOR FRAME SHALL BE 4" FROM FACE OF WALL TO BACKSIDE OF FRAME U.N.O.
B. ALL NEW UNIT PARTITIONS ARE TYPE 3 U.N.O.
C. DIMENSIONS ARE FROM FINISH FACE OF WALL TO FINISH FACE OF WALL U.N.O.
D. CENTER ALL CLOSET DOORS ON CLOSETS U.N.O.
E. ALL LIGHTING FOR REFERENCE ONLY.
F. ALL CABINET DRAWINGS ARE FOR DESIGN INTENT ONLY. CABINET MAKER TO SUBMIT DETAILED SHOP DRAWINGS FOR REVIEW. BASIS OF DESIGN ARE SMART CABINETS
I. ALL VISIBLE SIDES OF CABINETS ARE TO RECEIVE A FINISHED PANEL THAT MATCHES THE CABINETS. THIS INCLUDES CABINETS THAT ARE UP AGAINST THE RADIATORS AND/OR FACING THE WINDOWS. TYP OF ALL.
J. ALL APPLIANCES IN THE APARTMENT UNITS WILL BE NEW ENERGY STAR APPLIANCES.
K. PROVIDE BLOCKING FOR FUTURE GRAB BARS IN ALL UNIT BATHROOMS.
L. ALL PANTRY AND LINEN CLOSETS TO RECEIVE FIVE (5) ADJUSTABLE MELAMINE SHELVES.
M. ALL CLOSETS TO RECEIVE ONE (1) MELAMINE SHELF AND COAT ROD. U.N.O.
N. EACH SHOWER TO BE PROVIDED W/ GLASS SHOWER DOOR.
O. PROVIDE AND INSTALL IN EACH APARTMENT (2) TOWEL BARS, (1) TOILET PAPER HOLDER, (1) ROBE HOOK.

APARTMENT ROOM FINISH SCHEDULE

ROOM NAME	FLOOR	BASE	WALLS NORTH	WALLS SOUTH	WALLS EAST	WALLS WEST	CEILING	REMARKS	REV. NO.
LIVING AREA	VP-1	RB-3	PT-1	PT-1	PT-1	PT-1	PT-3	NOTES: A	
KITCHEN	VP-1	RB-3	PT-1	PT-1	PT-1	PT-1	PT-3	NOTES: A	
CLOSET / LAUNDRY	VP-1	RB-3	PT-1	PT-1	PT-1	PT-1	PT-3	NOTES: A	
BEDROOM	VP-1	RB-3	PT-1	PT-1	PT-1	PT-1	PT-3	NOTES: A	
BATHROOM	VP-1	RB-3	PT-1	PT-1	PT-1	PT-1	PT-3	NOTES: A	
FOYER / CORRIDOR	VP-1	RB-3	PT-1	PT-1	PT-1	PT-1	PT-3	NOTES: A	
LINEN	VP-1	RB-3	PT-1	PT-1	PT-1	PT-1	PT-3	NOTES: A	

NOTES:
A. ALL TRIM, CASINGS, DOORS, ETC ARE TO BE PAINTED. COLOR & SHEEN TBD.

APARTMENT DOOR SCHEDULE

DOOR MARK	DOOR LOCATION	DOOR INFORMATION SIZE WIDTH	HEIGHT	THICK	STYLE	DOOR MATERIAL	FRAME INFORMATION TYPE	FRAME MATERIAL	DETAIL HEAD	JAMB	OTHER	HDW. SET	FIRE RATING	REMARKS
D BTH (x1)	BATHROOM	2'-8"	6'-8"	1 3/8"	2	OAK	A	WD	5/A600	6/A600	–	2	–	PRE-HUNG. STAINED
D C/L (x1)	CLOSET / LAUNDRY	2'-6"	6'-8"	1 3/8"	2	OAK	A	WD	5/A600	6/A600	–	3	–	PRE-HUNG. STAINED
D LI (x1)	LINEN	1'-6"	6'-8"	1 3/8"	2	OAK	A	WD	5/A600	6/A600	–	3	–	PRE-HUNG. STAINED

APPROVED
CIN BD
2022P03573
02/01/23

City of Cincinnati Buildings & Inspections

C:\Users\jbodkin\Desktop\V21_MkDS_Projects\A 2022_From Ten1_PHASE C\CADs - Phase C - From Ten1\03_Formica_A310 - Floors 11-12.dwg-A310.2 - K. Plot Date/Time: Nov 15, 2022-8:27am - By: jbodkin

STATE OF OHIO JOSEPH A. BODKIN 8135567 REGISTERED ARCHITECT
Joseph A. Bodkin, License #8135567
Expiration Date: 12.31.2023

modelgroup
DEVELOPMENT • CONSTRUCTION • MANAGEMENT
1826 Race Street
Cincinnati, Ohio 45202
513.559.0048

Formica Building
Office/Apartments
Auditor Address: 115 E. 5th Street, Actual Address: 120 E. 4th Street
Cincinnati OH 45202

No.	Revisions	Date
1	ENG CHG #1	11.14.2022

Project: Formica Building
115 E 5th Street
Cincinnati, Ohio 45202
Set: LDK K Construction
Project No: 2022_259
Issue Date
Scale: As Noted
Drawn
Checked

A310.2

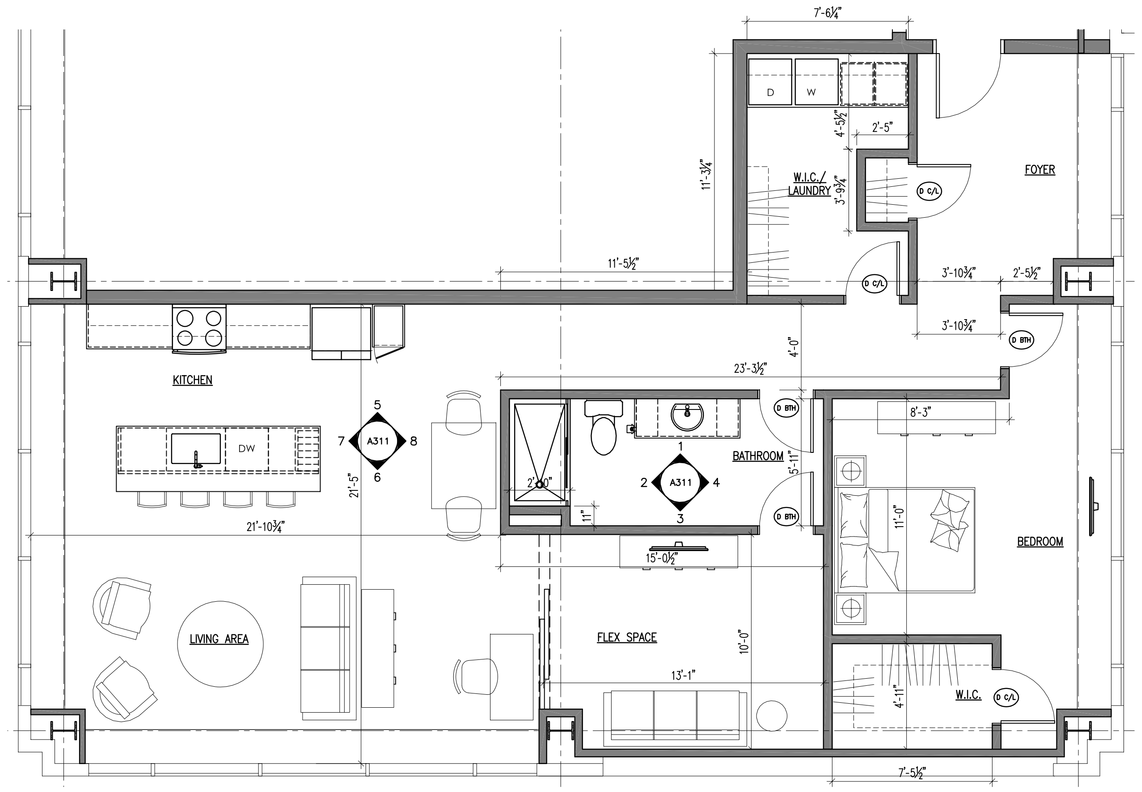

APARTMENT FLOOR PLAN (1 / A311)
SCALE: 1/4" = 1'-0"

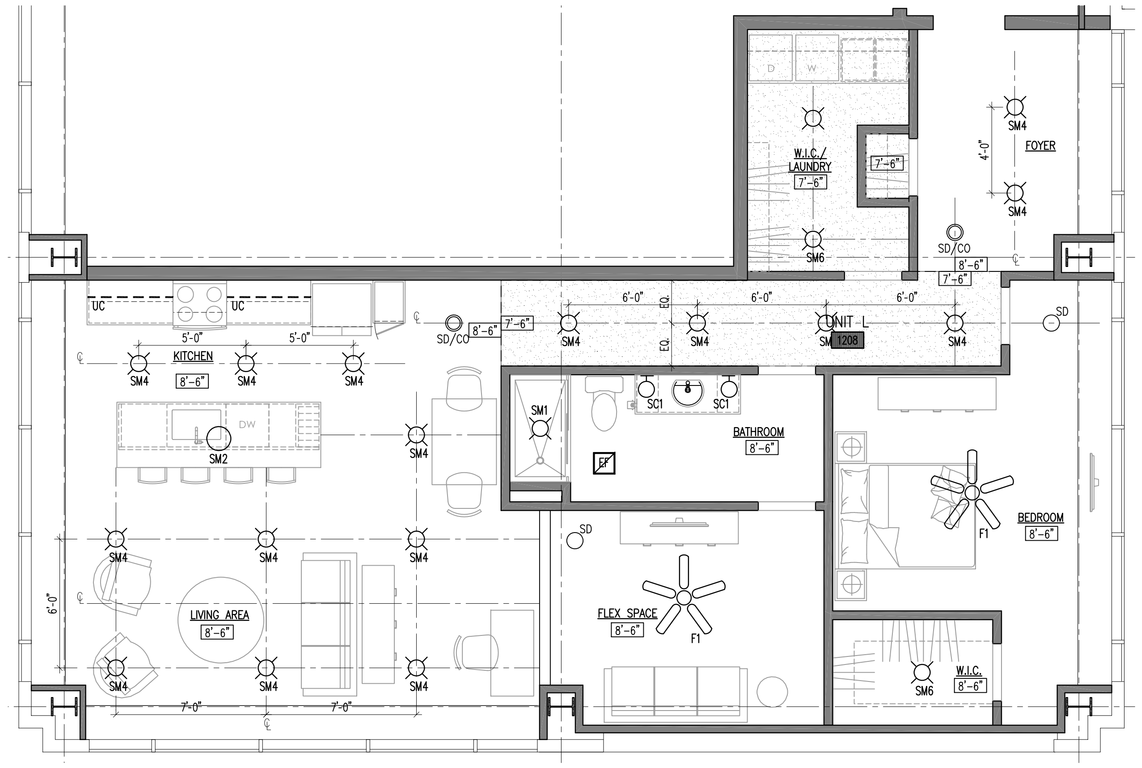

APARTMENT REFLECTED CEILING PLAN (2 / A311)
SCALE: 1/4" = 1'-0"

GENERAL APARTMENT NOTES

A. DOOR FRAME SHALL BE 4" FROM FACE OF WALL TO BACKSIDE OF FRAME U.N.O.
B. ALL NEW UNIT PARTITIONS ARE TYPE 3 U.N.O.
C. DIMENSIONS ARE FROM FINISH FACE OF WALL TO FINISH FACE OF WALL U.N.O.
D. CENTER ALL CLOSET DOORS ON CLOSETS U.N.O.
E. ALL LIGHTING FOR REFERENCE ONLY.
F. ALL CABINET DRAWINGS ARE FOR DESIGN INTENT ONLY. CABINET MAKER TO SUBMIT DETAILED SHOP DRAWINGS FOR REVIEW. BASIS OF DESIGN ARE SMART CABINETS
I. ALL VISIBLE SIDES OF CABINETS ARE TO RECEIVE A FINISHED PANEL THAT MATCHES THE CABINETS. THIS INCLUDES CABINETS THAT ARE UP AGAINST THE RADIATORS AND/OR FACING THE WINDOWS. TYP OF ALL.
J. ALL APPLIANCES IN THE APARTMENT UNITS WILL BE NEW ENERGY STAR APPLIANCES.
K. PROVIDE BLOCKING FOR FUTURE GRAB BARS IN ALL UNIT BATHROOMS.
L. ALL PANTRY AND LINEN CLOSETS TO RECEIVE FIVE (5) ADJUSTABLE MELAMINE SHELVES.
M. ALL CLOSETS TO RECEIVE ONE (1) MELAMINE SHELF AND COAT ROD. U.N.O.
N. EACH SHOWER TO BE PROVIDED W/ GLASS SHOWER DOOR.
O. PROVIDE AND INSTALL IN EACH APARTMENT (2) TOWEL BARS, (1) TOILET PAPER HOLDER, (1) ROBE HOOK.

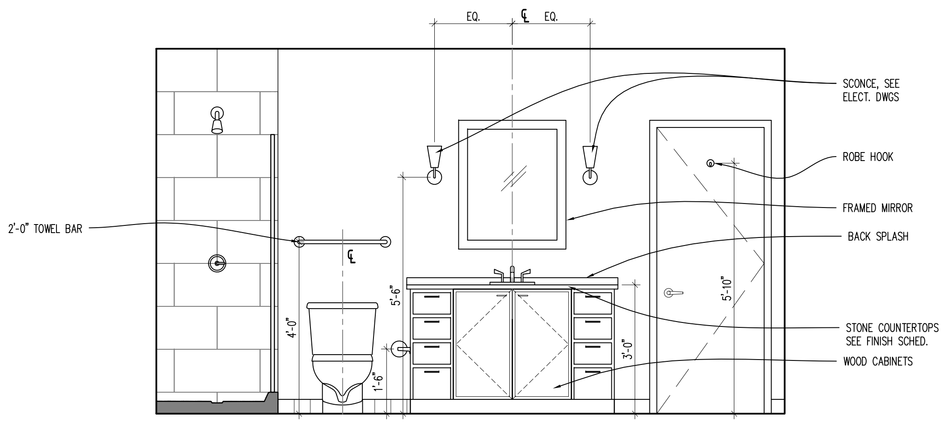

ELEVATION (1 / A311)
SCALE: 1/2" = 1'-0"

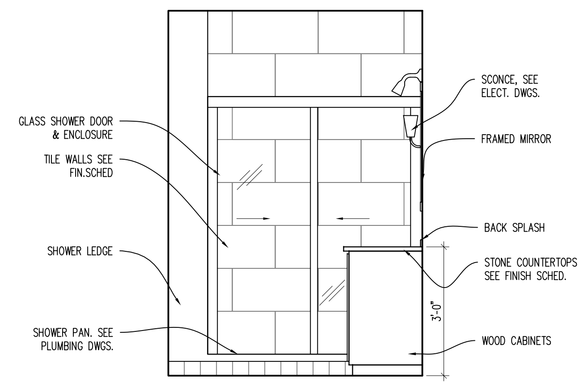

ELEVATION (2 / A311)
SCALE: 1/2" = 1'-0"

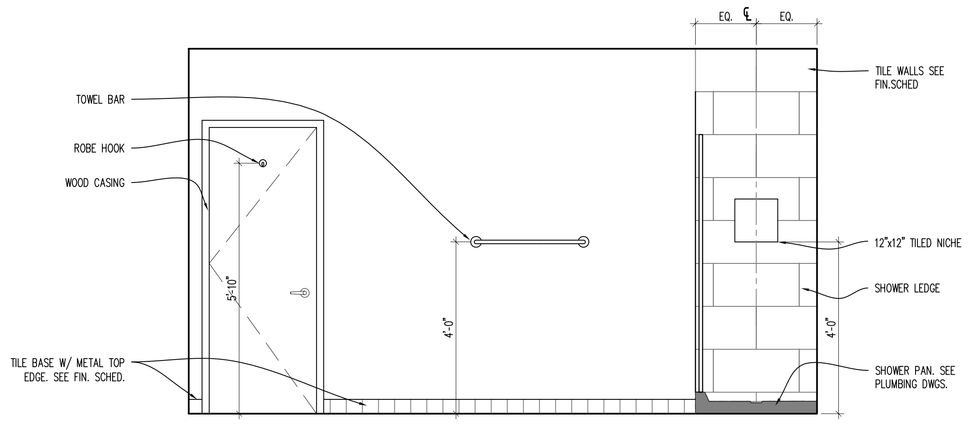

ELEVATION (3 / A311)
SCALE: 1/2" = 1'-0"

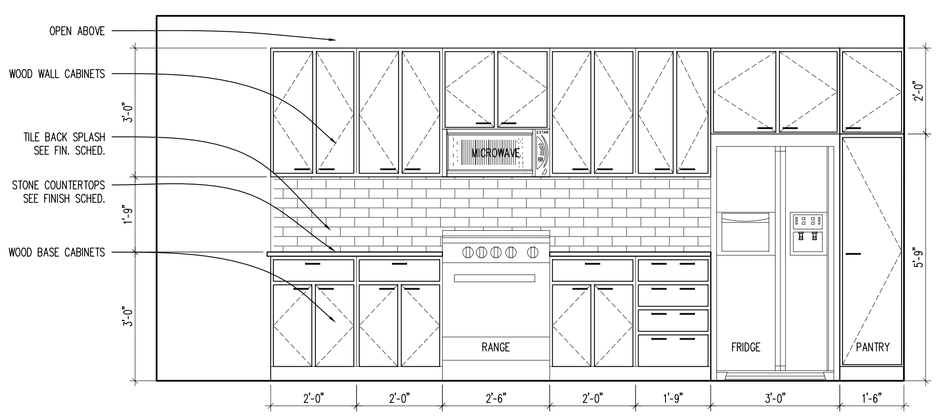

ELEVATION (5 / A311)
SCALE: 1/2" = 1'-0"

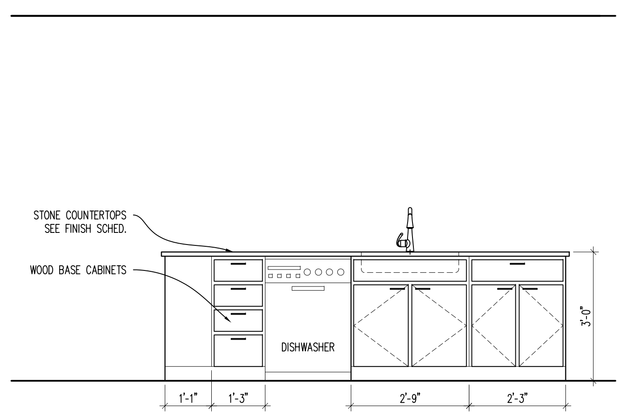

ELEVATION (6 / A311)
SCALE: 1/2" = 1'-0"

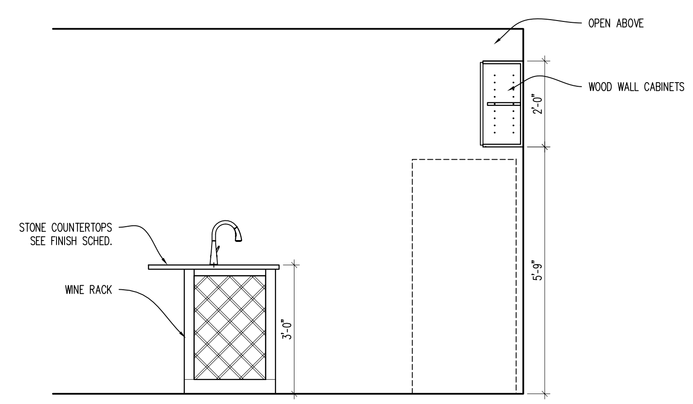

ELEVATION (7 / A311)
SCALE: 1/2" = 1'-0"

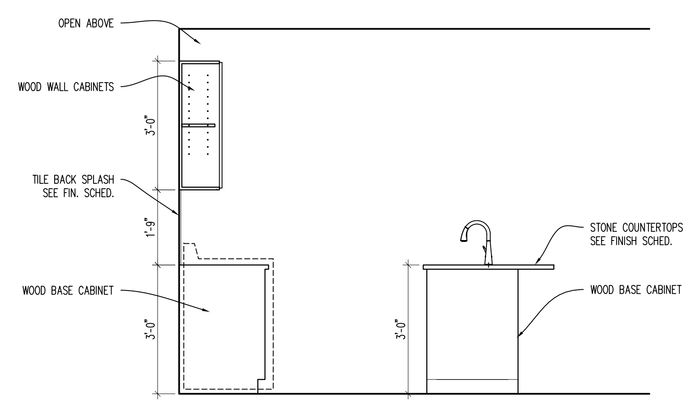

ELEVATION (8 / A311)
SCALE: 1/2" = 1'-0"

APARTMENT ROOM FINISH SCHEDULE

ROOM NAME	FLOOR	BASE	WALLS NORTH	WALLS SOUTH	WALLS EAST	WALLS WEST	CEILING	REMARKS	REV. NO.
LIVING AREA	VP-1	RB-3	PT-1	PT-1	PT-1	PT-1	PT-3	NOTES: A	
DINING AREA	VP-1	RB-3	PT-1	PT-1	PT-1	PT-1	PT-3	NOTES: A	
KITCHEN	VP-1	RB-3	PT-1	PT-1	PT-1	PT-1	PT-3	NOTES: A	
BATHROOM	VP-1	RB-3	PT-1	PT-1	PT-1	PT-1	PT-3	NOTES: A	
FOYER / CORRIDOR	VP-1	RB-3	PT-1	PT-1	PT-1	PT-1	PT-3	NOTES: A	
CLOSET	VP-1	RB-3	PT-1	PT-1	PT-1	PT-1	PT-3	NOTES: A	
CLOSET / LAUNDRY	VP-1	RB-3	PT-1	PT-1	PT-1	PT-1	PT-3	NOTES: A	
BEDROOM	VP-1	RB-3	PT-1	PT-1	PT-1	PT-1	PT-3	NOTES: A	
WALK-IN CLOSET	VP-1	RB-3	PT-1	PT-1	PT-1	PT-1	PT-3	NOTES: A	
FLEX SPACE	VP-1	RB-3	PT-1	PT-1	PT-1	PT-1	PT-3	NOTES: A	

NOTES:
A. ALL TRIM, CASINGS, DOORS, ETC ARE TO BE PAINTED. COLOR & SHEEN TBD.

APARTMENT DOOR SCHEDULE

DOOR MARK	DOOR LOCATION	DOOR INFORMATION SIZE WIDTH	HEIGHT	THICK	STYLE	DOOR MATERIAL	FRAME INFORMATION TYPE	FRAME MATERIAL	DETAIL HEAD	JAMB	OTHER	HDW. SET	FIRE RATING	REMARKS
D BR (x1)	BEDROOM	2'-8"	6'-8"	1 3/8"	2	OAK	A	WD	5/A600	6/A600	–	2	–	PRE-HUNG. STAINED
D BTH (x2)	BATHROOM	2'-8"	6'-8"	1 3/8"	2	OAK	A	WD	5/A600	6/A600	–	2	–	PRE-HUNG. STAINED
D C (x2)	CLOSET / W.I.C.	2'-6"	6'-8"	1 3/8"	2	OAK	A	WD	5/A600	6/A600	–	3	–	PRE-HUNG. STAINED
D C/L (x1)	CLOSET / LAUNDRY	2'-6"	6'-8"	1 3/8"	2	OAK	A	WD	5/A600	6/A600	–	3	–	PRE-HUNG. STAINED

STATE OF OHIO — JOSEPH A. BODKIN 8135567 — REGISTERED ARCHITECT
Joseph A. Bodkin, License #8135567
Expiration Date: 12.31.2023

modelgroup
DEVELOPMENT • CONSTRUCTION • MANAGEMENT
1826 Race Street
Cincinnati, Ohio 45202
513.559.0048

Formica Building

Office/Apartments
Auditor Address: 115 E. 5th Street, Actual Address: 120 E. 4th Street
Cincinnati OH 45202

No.	Revisions	Date
1	ENG CHG #1	11.14.2022

Project: Formica Building
115 E 5th Street
Cincinnati, Ohio 45202
Sheet: Art L
Construction
Project No: 2022_259
Scale: As Noted
Drawn
Checked
Issue Date

A311

APPROVED
CIN BD
2022P03573
02/01/23
city of CINCINNATI BUILDINGS & INSPECTIONS

C:\Users\jbodkin\Dropbox\WD_Projects\Formica\Revit_PHASE C\CADs - Phase C - From 1st\03_Formica_A300 - Floors 11-12.dwg-A311 - L Plot Date/Time: Nov 15, 2022-8:28am - By: jbodkin

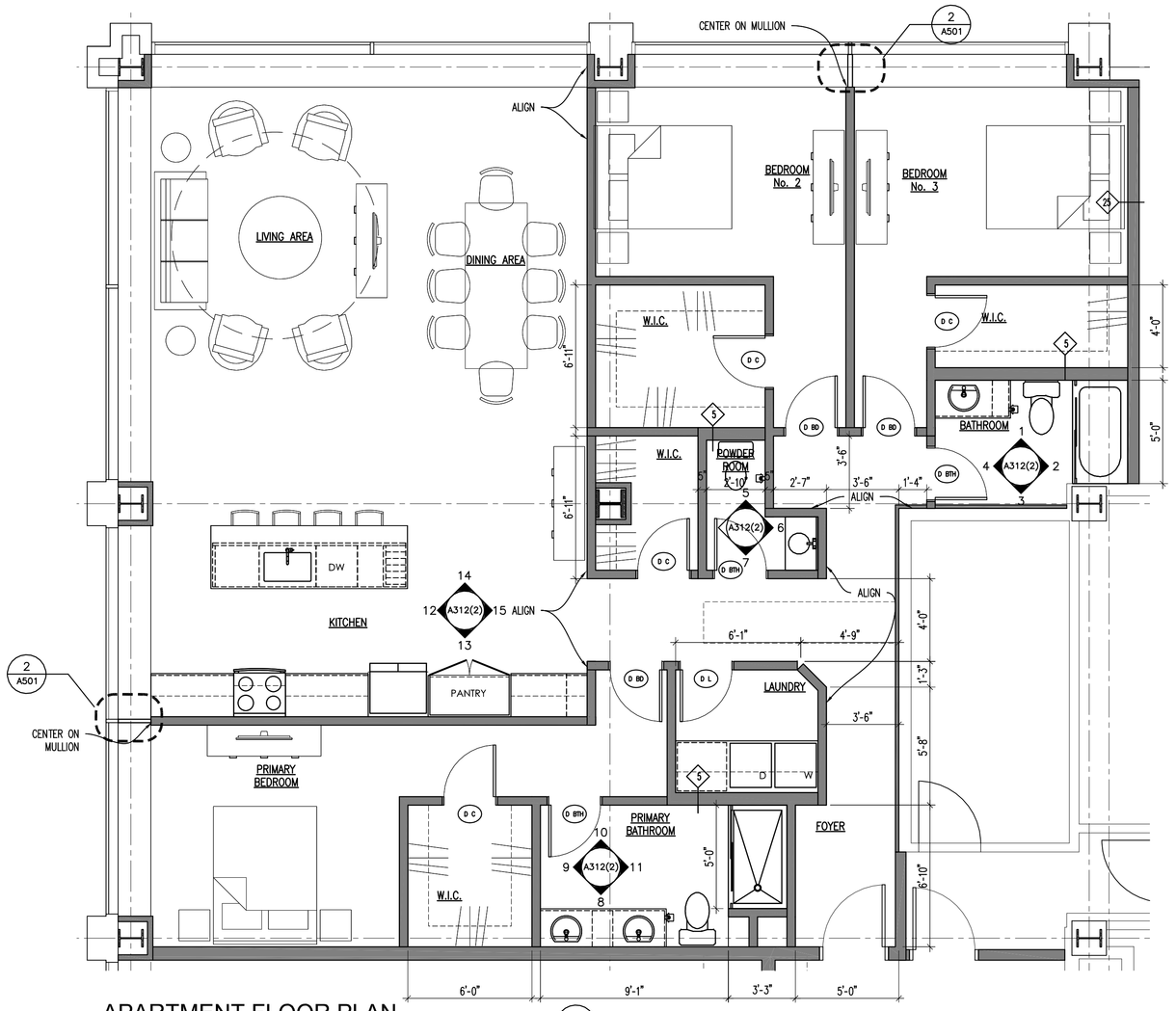

APARTMENT FLOOR PLAN
SCALE: 1/4" = 1'-0"
1 A312(1)

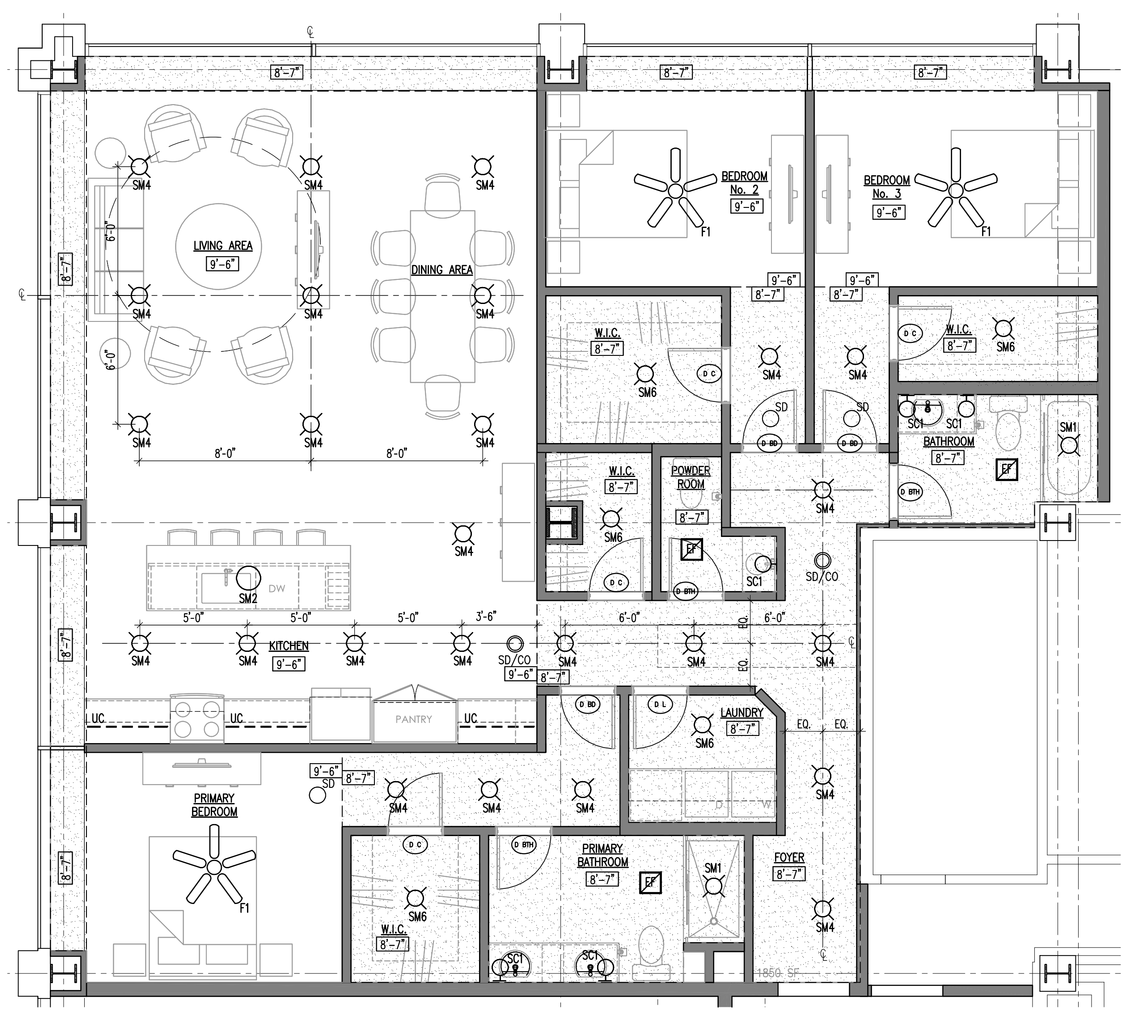

APARTMENT REFLECTED CEILING PLAN
SCALE: 1/4" = 1'-0"
2 A312(1)

GENERAL APARTMENT NOTES

A. DOOR FRAME SHALL BE 4" FROM FACE OF WALL TO BACKSIDE OF FRAME U.N.O.
B. ALL NEW UNIT PARTITIONS ARE TYPE 3 U.N.O.
C. DIMENSIONS ARE FROM FINISH FACE OF WALL TO FINISH FACE OF WALL U.N.O.
D. CENTER ALL CLOSET DOORS ON CLOSETS U.N.O.
E. ALL LIGHTING FOR REFERENCE ONLY.
F. ALL CABINET DRAWINGS ARE FOR DESIGN INTENT ONLY. CABINET MAKER TO SUBMIT DETAILED SHOP DRAWINGS FOR REVIEW. BASIS OF DESIGN ARE SMART CABINETS
I. ALL VISIBLE SIDES OF CABINETS ARE TO RECEIVE A FINISHED PANEL THAT MATCHES THE CABINETS. THIS INCLUDES CABINETS THAT ARE UP AGAINST THE RADIATORS AND/OR FACING THE WINDOWS. TYP OF ALL.
J. ALL APPLIANCES IN THE APARTMENT UNITS WILL BE NEW ENERGY STAR APPLIANCES.
K. PROVIDE BLOCKING FOR FUTURE GRAB BARS IN ALL UNIT BATHROOMS.
L. ALL PANTRY AND LINEN CLOSETS TO RECEIVE FIVE (5) ADJUSTABLE MELAMINE SHELVES.
M. ALL CLOSETS TO RECEIVE ONE (1) MELAMINE SHELF AND COAT ROD. U.N.O.
N. EACH SHOWER TO BE PROVIDED W/ GLASS SHOWER DOOR.
O. PROVIDE AND INSTALL IN EACH APARTMENT (2) TOWEL BARS, (1) TOILET PAPER HOLDER, (1) ROBE HOOK.

APARTMENT ROOM FINISH SCHEDULE

ROOM NAME	FLOOR	BASE	WALLS NORTH	WALLS SOUTH	WALLS EAST	WALLS WEST	CEILING	REMARKS	REV. NO.
LIVING / DINING AREA	VP-1	RB-3	PT-1	PT-1	PT-1	PT-1	PT-3	NOTES: A	
KITCHEN	VP-1	RB-3	PT-1	PT-1	PT-1	PT-1	PT-3	NOTES: A	
CLOSETS / LAUNDRY	VP-1	RB-3	PT-1	PT-1	PT-1	PT-1	PT-3	NOTES: A	
FOYER	VP-1	RB-3	PT-1	PT-1	PT-1	PT-1	PT-3	NOTES: A	
BEDROOM	VP-1	RB-3	PT-1	PT-1	PT-1	PT-1	PT-3	NOTES: A	
BATHROOM	VP-1	RB-3	PT-1	PT-1	PT-1	PT-1	PT-3	NOTES: A	
POWDER ROOM	VP-1	RB-3	PT-1	PT-1	PT-1	PT-1	PT-3	NOTES: A	

NOTES:
A. ALL TRIM, CASINGS, DOORS, ETC ARE TO BE PAINTED. COLOR & SHEEN TBD.

APARTMENT DOOR SCHEDULE

DOOR MARK	DOOR LOCATION	DOOR INFORMATION SIZE WIDTH	HEIGHT	THICK	STYLE	DOOR MATERIAL	FRAME INFORMATION TYPE	FRAME MATERIAL	DETAIL HEAD	JAMB	OTHER	HDW. SET	FIRE RATING	REMARKS
D BR (x3)	BEDROOM	2'-8"	6'-8"	1 3/8"	2	OAK	A	WD	5/A600	6/A600	–	2	–	PRE-HUNG STAINED
D BTH (x3)	BATHROOM /POWDER	2'-8"	6'-8"	1 3/8"	2	OAK	A	WD	5/A600	6/A600	–	2	–	PRE-HUNG STAINED
D C (x4)	CLOSET / WALK IN	2'-8"	6'-8"	1 3/8"	2	OAK	A	WD	5/A600	6/A600	–	3	–	PRE-HUNG STAINED
D L (x1)	LAUNDRY	2'-8"	6'-8"	1 3/8"	2	OAK	A	WD	5/A600	6/A600	–	4	–	PRE-HUNG STAINED

STATE OF OHIO JOSEPH A. BODKIN 3135567 REGISTERED ARCHITECT
Joseph A. Bodkin, License #3135567
Expiration Date: 12.31.2023

modelgroup
DEVELOPMENT • CONSTRUCTION • MANAGEMENT
1826 Race Street
Cincinnati, Ohio 45202
513.559.0048

Formica Building

Office/Apartments
Auditor Address: 115 E. 5th Street, Actual Address: 120 E. 4th Street
Cincinnati OH 45202

No.	Revisions	Date
1	ENG CHG #1	11.14.2022

Project: Formica Building
115 E 5th Street
Cincinnati, Ohio 45202
Sheet Title: UPK M
Construction
Project No: 2022_259
Issue Date
Scale: As Noted
Drawn
Checked

A312 (1)

APPROVED
CIN BD
2022P03573
02/01/23
city of CINCINNATI BUILDINGS & INSPECTIONS

C:\Users\jbodkin\Dropbox\AT_WORK_Projects\3_from 1en1_PHASE C\CADs - Phase C - From 1en1\03_Formica.A300 - Floor 13.dwg-A312 - M Plot Date/Time: Nov 15, 2022-8:30am - By: jbodkin

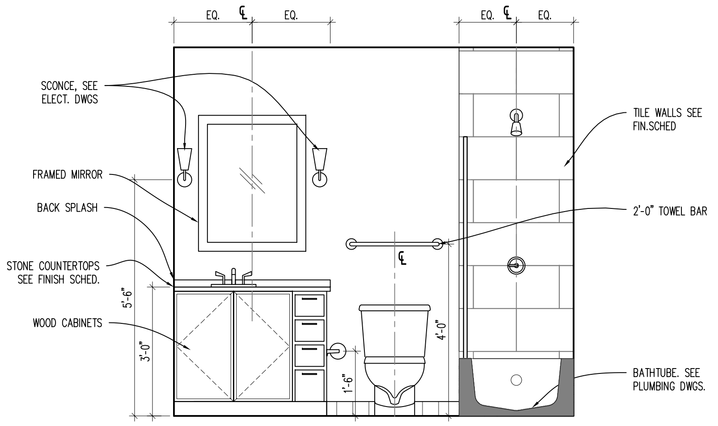

ELEVATION 1 A312(2)
SCALE: 1/2" = 1'-0"

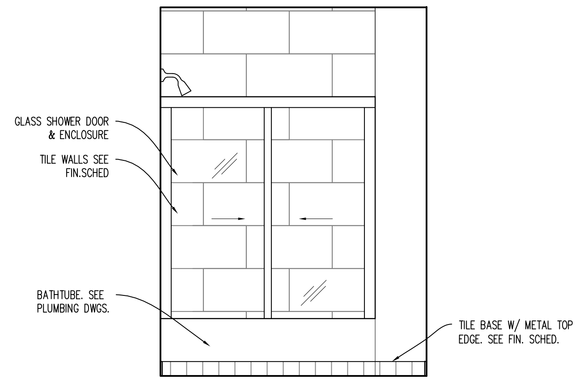

ELEVATION 2 A312(2)
SCALE: 1/2" = 1'-0"

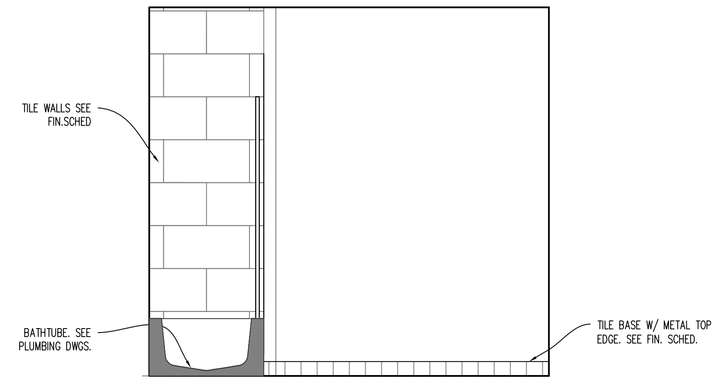

ELEVATION 3 A312(2)
SCALE: 1/2" = 1'-0"

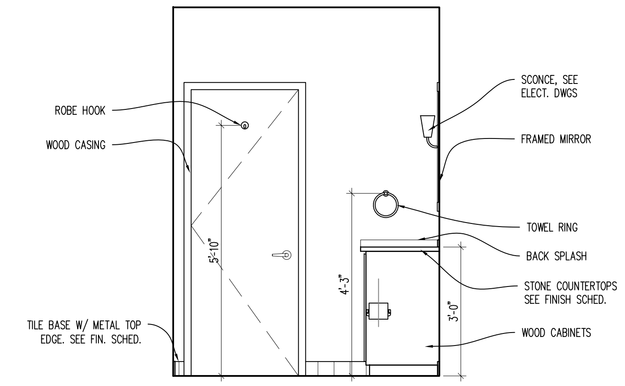

ELEVATION 4 A312(2)
SCALE: 1/2" = 1'-0"

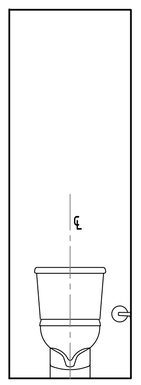

ELEVATION 5 A312(2)
SCALE: 1/2" = 1'-0"

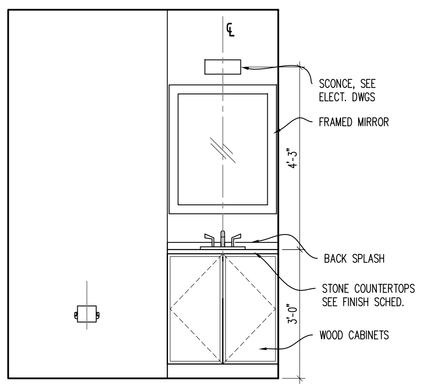

ELEVATION 6 A312(2)
SCALE: 1/2" = 1'-0"

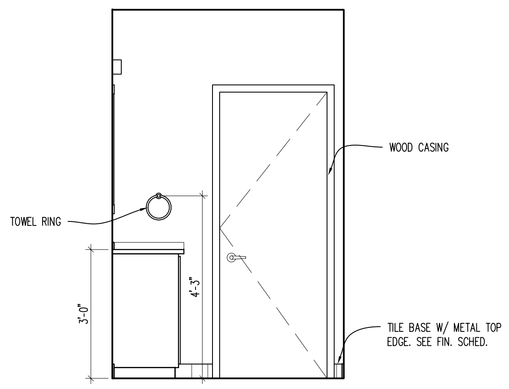

ELEVATION 7 A312(2)
SCALE: 1/2" = 1'-0"

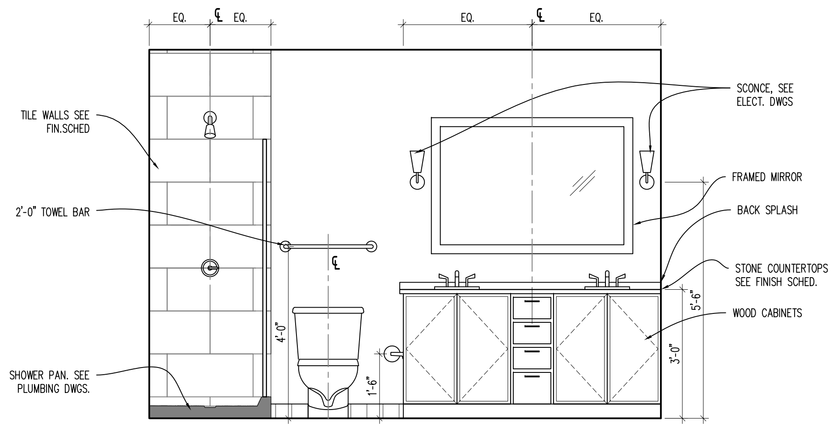

ELEVATION 8 A312(2)
SCALE: 1/2" = 1'-0"

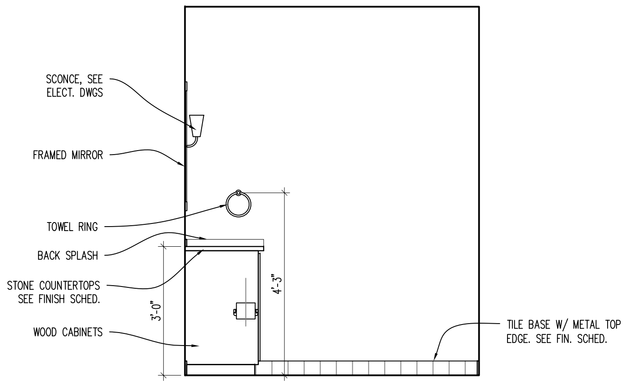

ELEVATION 9 A312(2)
SCALE: 1/2" = 1'-0"

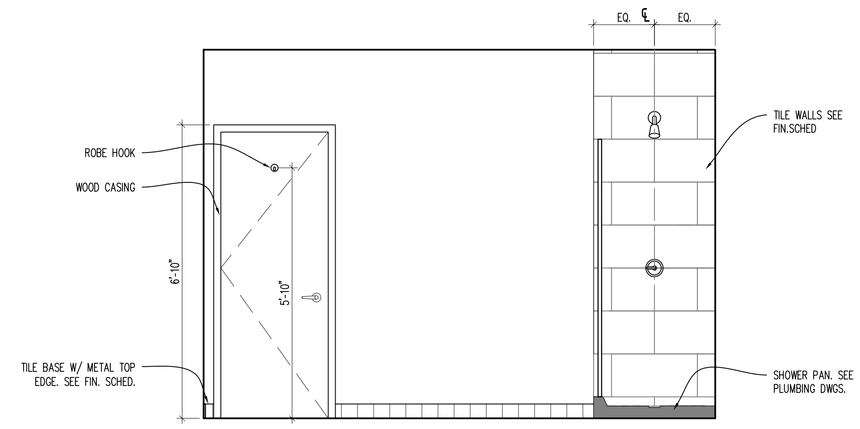

ELEVATION 10 A312(2)
SCALE: 1/2" = 1'-0"

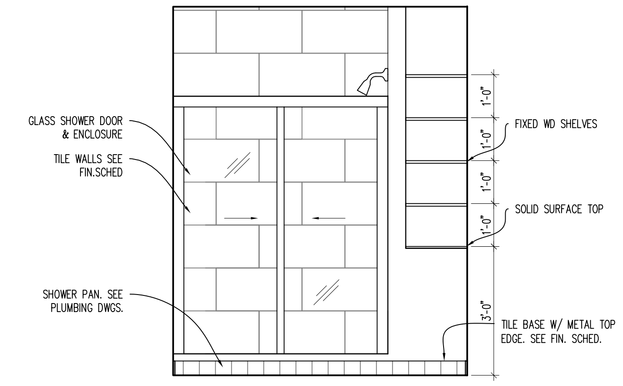

ELEVATION 11 A312(2)
SCALE: 1/2" = 1'-0"

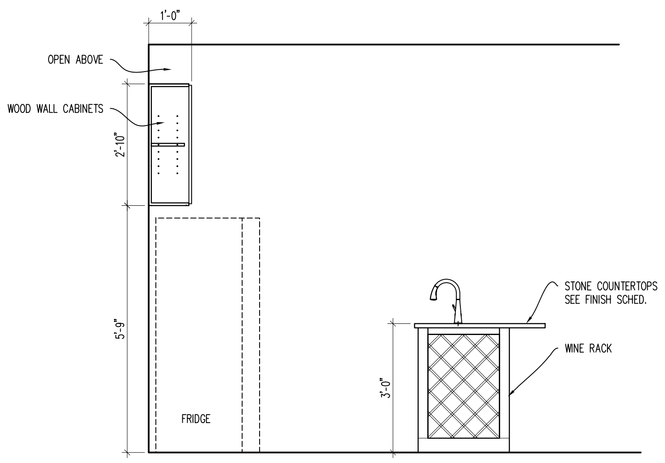

ELEVATION 12 A312(2)
SCALE: 1/2" = 1'-0"

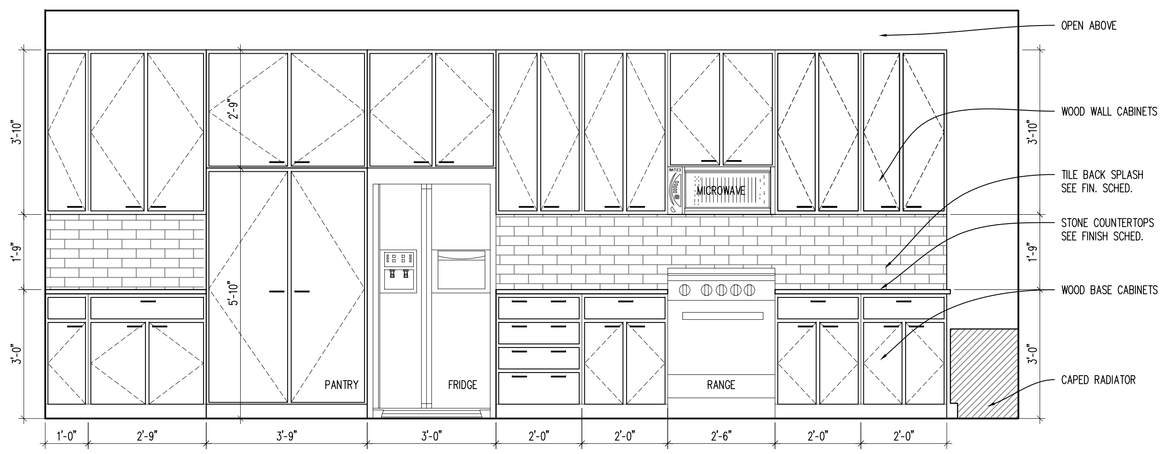

ELEVATION 13 A312(2)
SCALE: 1/2" = 1'-0"

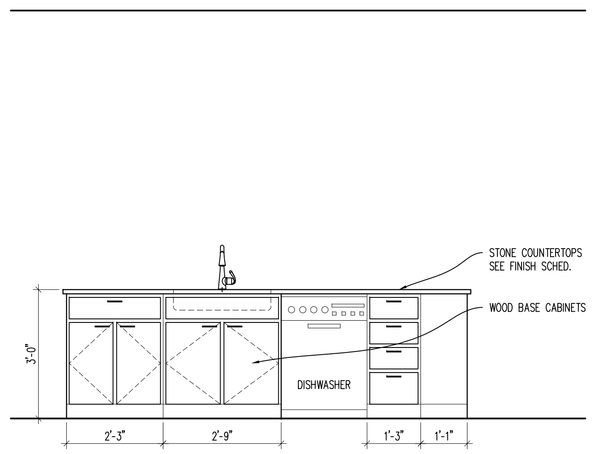

ELEVATION 14 A312(2)
SCALE: 1/2" = 1'-0"

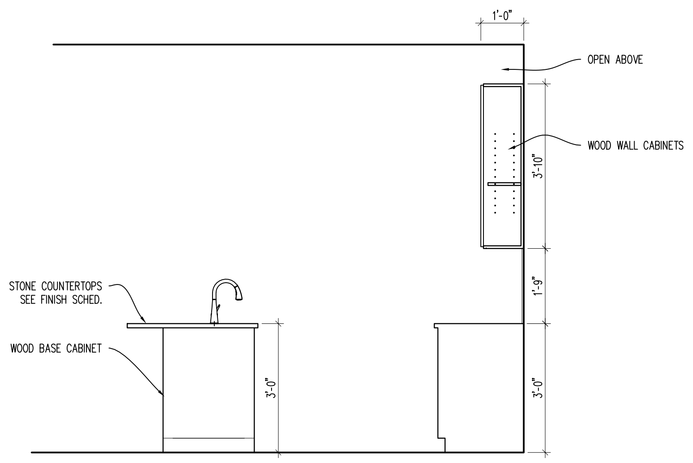

ELEVATION 15 A312(2)
SCALE: 1/2" = 1'-0"

GENERAL APARTMENT NOTES

A. DOOR FRAME SHALL BE 4" FROM FACE OF WALL TO BACKSIDE OF FRAME U.N.O.
B. ALL NEW UNIT PARTITIONS ARE TYPE 3 U.N.O.
C. DIMENSIONS ARE FROM FINISH FACE OF WALL TO FINISH FACE OF WALL U.N.O.
D. CENTER ALL CLOSET DOORS ON CLOSETS U.N.O.
E. ALL LIGHTING FOR REFERENCE ONLY.
F. ALL CABINET DRAWINGS ARE FOR DESIGN INTENT ONLY. CABINET MAKER TO SUBMIT DETAILED SHOP DRAWINGS FOR REVIEW. BASIS OF DESIGN ARE SMART CABINETS
I. ALL VISIBLE SIDES OF CABINETS ARE TO RECEIVE A FINISHED PANEL THAT MATCHES THE CABINETS. THIS INCLUDES CABINETS THAT ARE UP AGAINST THE RADIATORS AND/OR FACING THE WINDOWS. TYP OF ALL.
J. ALL APPLIANCES IN THE APARTMENT UNITS WILL BE NEW ENERGY STAR APPLIANCES.
K. PROVIDE BLOCKING FOR FUTURE GRAB BARS IN ALL UNIT BATHROOMS.
L. ALL PANTRY AND LINEN CLOSETS TO RECEIVE FIVE (5) ADJUSTABLE MELAMINE SHELVES.
M. ALL CLOSETS TO RECEIVE ONE (1) MELAMINE SHELF AND COAT ROD. U.N.O.
N. EACH SHOWER TO BE PROVIDED W/ GLASS SHOWER DOOR.
O. PROVIDE AND INSTALL IN EACH APARTMENT (2) TOWEL BARS, (1) TOILET PAPER HOLDER, (1) ROBE HOOK.

STATE OF OHIO
JOSEPH A. BODKIN
3135567
REGISTERED ARCHITECT
Joseph A. Bodkin, License #3135567
Expiration Date: 12.31.2023

modelgroup
DEVELOPMENT • CONSTRUCTION • MANAGEMENT
1826 Race Street
Cincinnati, Ohio 45202
513.559.0048

Formica Building

Office/Apartments

Auditor Address: 115 E. 5th Street, Actual Address: 120 E. 4th Street
Cincinnati OH 45202

No.	Revisions	Date
1	ENG CHG #1	11.14.2022

Project: Formica Building
115 E 5th Street
Cincinnati, Ohio 45202
Sheet Title: Art M
Construction
Project No: 2022_259
Issue Date
Scale: As Noted
Drawn
Checked

A312 (2)

APPROVED
CIN BD
2022P03573
02/01/23
city of CINCINNATI BUILDINGS & INSPECTIONS

C:\Users\jbodkin\Dropbox\01-NVDC_Projects\20_Formica_A300 - Floor 13.dwg-A312 - M (2), Plot Date/Time: Nov 15, 2022-8:31am - By: jbodkin

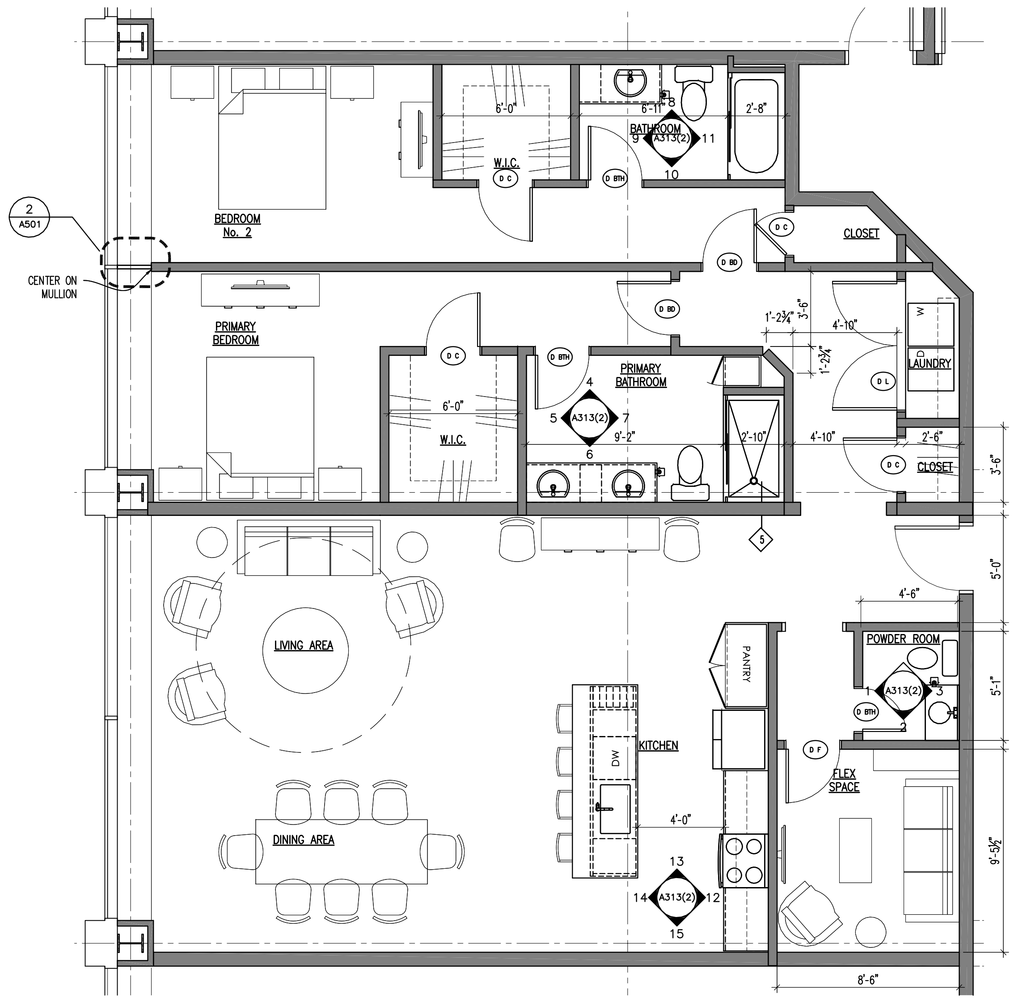

APARTMENT FLOOR PLAN
SCALE: 1/4" = 1'-0"

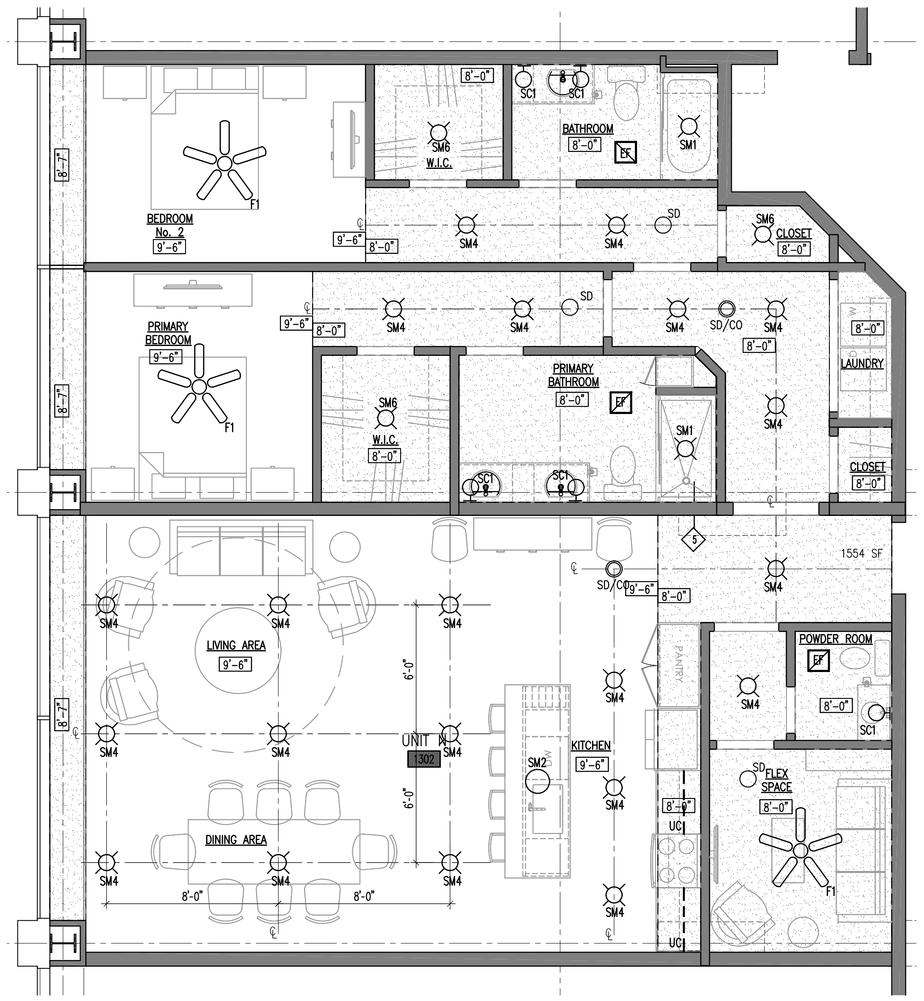

APARTMENT REFLECTED CEILING PLAN
SCALE: 1/4" = 1'-0"

GENERAL APARTMENT NOTES

A. DOOR FRAME SHALL BE 4" FROM FACE OF WALL TO BACKSIDE OF FRAME U.N.O.
B. ALL NEW UNIT PARTITIONS ARE TYPE 3 U.N.O.
C. DIMENSIONS ARE FROM FINISH FACE OF WALL TO FINISH FACE OF WALL U.N.O.
D. CENTER ALL CLOSET DOORS ON CLOSETS U.N.O.
E. ALL LIGHTING FOR REFERENCE ONLY.
F. ALL CABINET DRAWINGS ARE FOR DESIGN INTENT ONLY. CABINET MAKER TO SUBMIT DETAILED SHOP DRAWINGS FOR REVIEW. BASIS OF DESIGN ARE SMART CABINETS
I. ALL VISIBLE SIDES OF CABINETS ARE TO RECEIVE A FINISHED PANEL THAT MATCHES THE CABINETS. THIS INCLUDES CABINETS THAT ARE UP AGAINST THE RADIATORS AND/OR FACING THE WINDOWS. TYP OF ALL.
J. ALL APPLIANCES IN THE APARTMENT UNITS WILL BE NEW ENERGY STAR APPLIANCES.
K. PROVIDE BLOCKING FOR FUTURE GRAB BARS IN ALL UNIT BATHROOMS.
L. ALL PANTRY AND LINEN CLOSETS TO RECEIVE FIVE (5) ADJUSTABLE MELAMINE SHELVES.
M. ALL CLOSETS TO RECEIVE ONE (1) MELAMINE SHELF AND COAT ROD. U.N.O.
N. EACH SHOWER TO BE PROVIDED W/ GLASS SHOWER DOOR.
O. PROVIDE AND INSTALL IN EACH APARTMENT (2) TOWEL BARS, (1) TOILET PAPER HOLDER, (1) ROBE HOOK.

APARTMENT ROOM FINISH SCHEDULE

ROOM NAME	FLOOR	BASE	WALLS NORTH	WALLS SOUTH	WALLS EAST	WALLS WEST	CEILING	REMARKS	REV. NO.
LIVING / DINING AREA	VP-1	RB-3	PT-1	PT-1	PT-1	PT-1	PT-3	NOTES: A	
KITCHEN	VP-1	RB-3	PT-1	PT-1	PT-1	PT-1	PT-3	NOTES: A	
CLOSETS / LAUNDRY	VP-1	RB-3	PT-1	PT-1	PT-1	PT-1	PT-3	NOTES: A	
FLEX SPACE	VP-1	RB-3	PT-1	PT-1	PT-1	PT-1	PT-3	NOTES: A	
BEDROOM	VP-1	RB-3	PT-1	PT-1	PT-1	PT-1	PT-3	NOTES: A	
BATHROOM	VP-1	RB-3	PT-1	PT-1	PT-1	PT-1	PT-3	NOTES: A	
POWDER ROOM	VP-1	RB-3	PT-1	PT-1	PT-1	PT-1	PT-3	NOTES: A	

NOTES:
A. ALL TRIM, CASINGS, DOORS, ETC ARE TO BE PAINTED. COLOR & SHEEN TBD.

APARTMENT DOOR SCHEDULE

DOOR MARK	DOOR LOCATION	DOOR INFORMATION SIZE WIDTH	HEIGHT	THICK	STYLE	DOOR MATERIAL	FRAME INFORMATION TYPE	FRAME MATERIAL	DETAIL HEAD	JAMB	OTHER	HDW. SET	FIRE RATING	REMARKS
D BR (x2)	BEDROOM	2'-8"	6'-8"	1 3/8"	2	OAK	A	WD	5/A600	6/A600	–	2	–	PRE-HUNG STAINED
D BTH (x2)	BATHROOM	2'-8"	6'-8"	1 3/8"	2	OAK	A	WD	5/A600	6/A600	–	2	–	PRE-HUNG STAINED
D C (x4)	CLOSET / WALK IN	2'-8"	6'-8"	1 3/8"	2	OAK	A	WD	5/A600	6/A600	–	3	–	PRE-HUNG STAINED
D L (x1)	LAUNDRY	(3'-1"x2) 6'-2"	6'-8"	1 3/8"	2	OAK	A	WD	5/A600	6/A600	–	4	–	PRE-HUNG STAINED
D F (x1)	FLEX SPACE	2'-8"	6'-8"	1 3/8"	2	OAK	A	WD	5/A600	6/A600	–	3	–	PRE-HUNG STAINED
D BTH (x1)	POWDER ROOM	2'-2"	6'-8"	1 3/8"	2	OAK	A	WD	5/A600	6/A600	–	3	–	PRE-HUNG STAINED

STATE OF OHIO JOSEPH A. BODKIN 313557 REGISTERED ARCHITECT
Joseph A. Bodkin, License #313557
Expiration Date: 12.31.2023

modelgroup
DEVELOPMENT • CONSTRUCTION • MANAGEMENT
1826 Race Street
Cincinnati, Ohio 45202
513.559.0048

Formica Building

Office/Apartments

Auditor Address: 115 E. 5th Street, Actual Address: 120 E. 4th Street
Cincinnati OH 45202

No.	Revisions	Date
1	ENG CHG #1	11.14.2022

Project: Formica Building
115 E 5th Street
Cincinnati, Ohio 45202
Sheet Title: UPA N
Construction
Project No: 2022_259
Issue Date
Scale: As Noted
Drawn
Checked

A313 (1)

APPROVED
CIN BD
2022P03573
02/01/23

cityof CINCINNATI BUILDINGS & INSPECTIONS

From: \ten1\ PHASE CV24Dx - Phase C - From: ten1\03_Formica_A300 - Floor 13.dwg-A313 - N. Plot Date/Time: Nov 15, 2022-8:32am - By: jbodkin

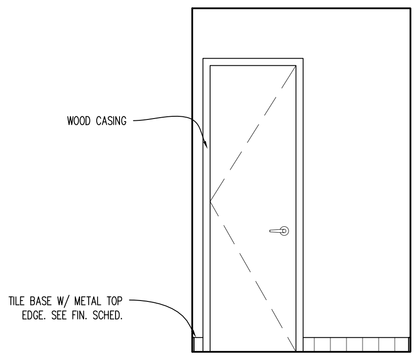

ELEVATION 1 A313(2)
SCALE: 1/2" = 1'-0"

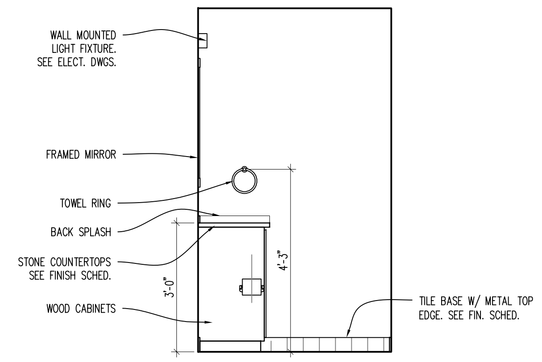

ELEVATION 2 A313(2)
SCALE: 1/2" = 1'-0"

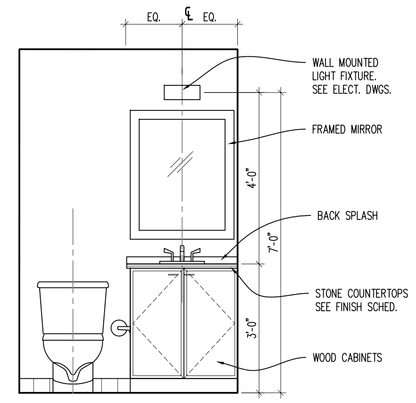

ELEVATION 3 A313(2)
SCALE: 1/2" = 1'-0"

GENERAL APARTMENT NOTES

A. DOOR FRAME SHALL BE 4" FROM FACE OF WALL TO BACKSIDE OF FRAME U.N.O.
B. ALL NEW UNIT PARTITIONS ARE TYPE 3 U.N.O.
C. DIMENSIONS ARE FROM FINISH FACE OF WALL TO FINISH FACE OF WALL U.N.O.
D. CENTER ALL CLOSET DOORS ON CLOSETS U.N.O.
E. ALL LIGHTING FOR REFERENCE ONLY.
F. ALL CABINET DRAWINGS ARE FOR DESIGN INTENT ONLY. CABINET MAKER TO SUBMIT DETAILED SHOP DRAWINGS FOR REVIEW. BASIS OF DESIGN ARE SMART CABINETS
I. ALL VISIBLE SIDES OF CABINETS ARE TO RECEIVE A FINISHED PANEL THAT MATCHES THE CABINETS. THIS INCLUDES CABINETS THAT ARE UP AGAINST THE RADIATORS AND/OR FACING THE WINDOWS. TYP OF ALL.
J. ALL APPLIANCES IN THE APARTMENT UNITS WILL BE NEW ENERGY STAR APPLIANCES.
K. PROVIDE BLOCKING FOR FUTURE GRAB BARS IN ALL UNIT BATHROOMS.
L. ALL PANTRY AND LINEN CLOSETS TO RECEIVE FIVE (5) ADJUSTABLE MELAMINE SHELVES.
M. ALL CLOSETS TO RECEIVE ONE (1) MELAMINE SHELF AND COAT ROD. U.N.O.
N. EACH SHOWER TO BE PROVIDED W/ GLASS SHOWER DOOR.
O. PROVIDE AND INSTALL IN EACH APARTMENT (2) TOWEL BARS, (1) TOILET PAPER HOLDER, (1) ROBE HOOK.

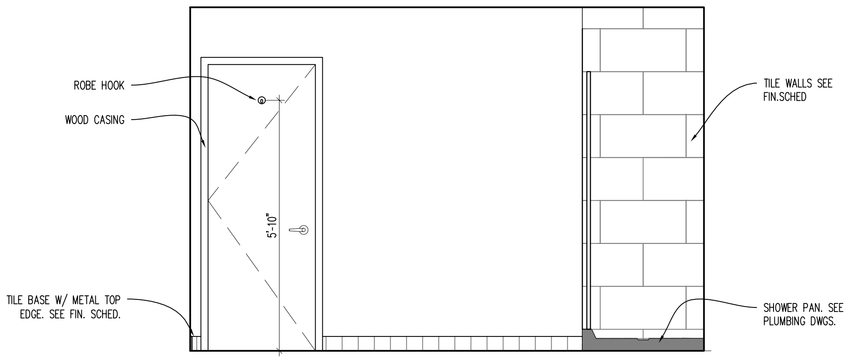

ELEVATION 4 A313(2)
SCALE: 1/2" = 1'-0"

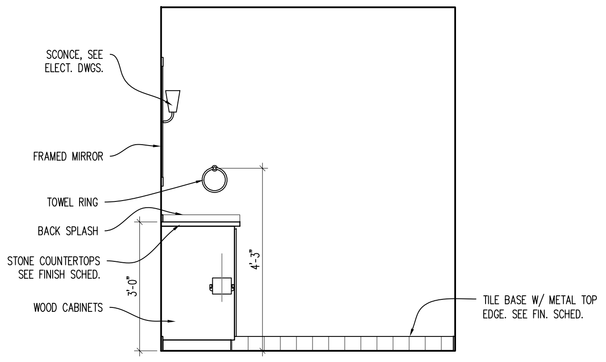

ELEVATION 5 A313(2)
SCALE: 1/2" = 1'-0"

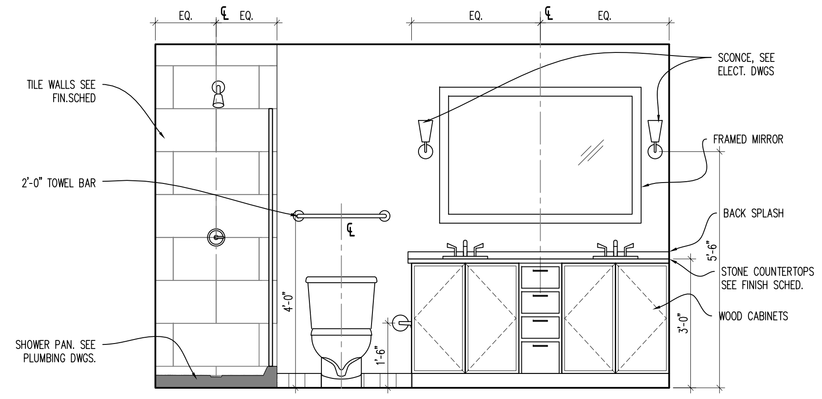

ELEVATION 6 A313(2)
SCALE: 1/2" = 1'-0"

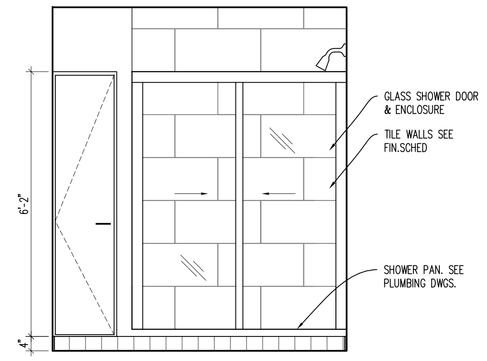

ELEVATION 7 A313(2)
SCALE: 1/2" = 1'-0"

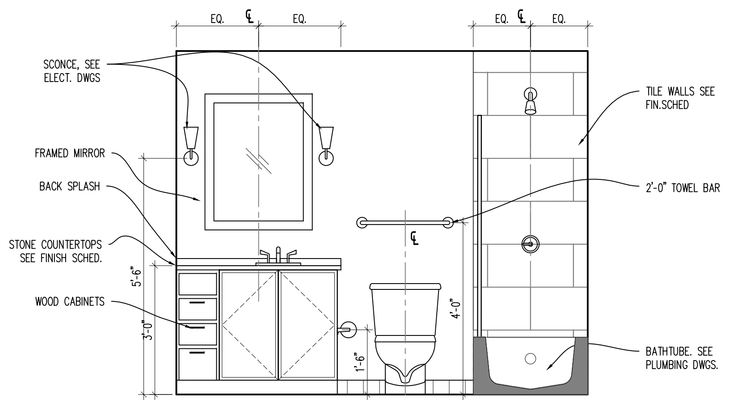

ELEVATION 8 A313(2)
SCALE: 1/2" = 1'-0"

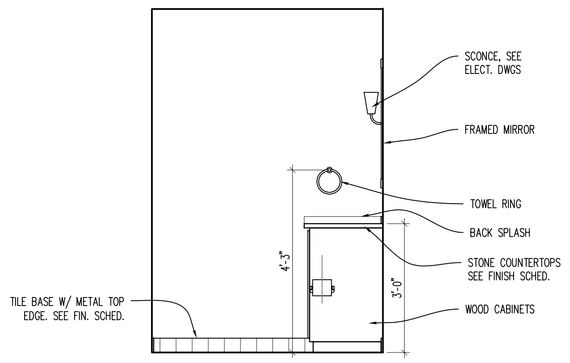

ELEVATION 9 A313(2)
SCALE: 1/2" = 1'-0"

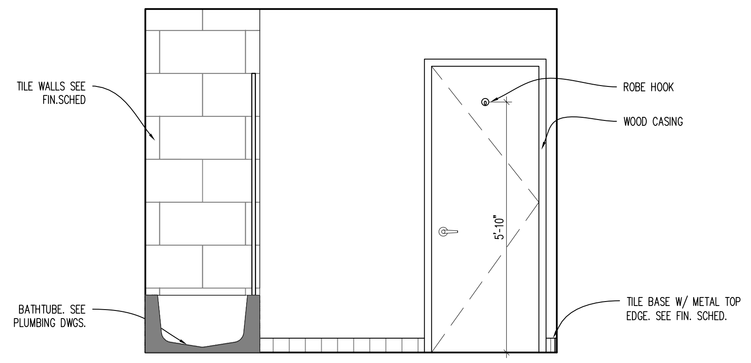

ELEVATION 10 A313(2)
SCALE: 1/2" = 1'-0"

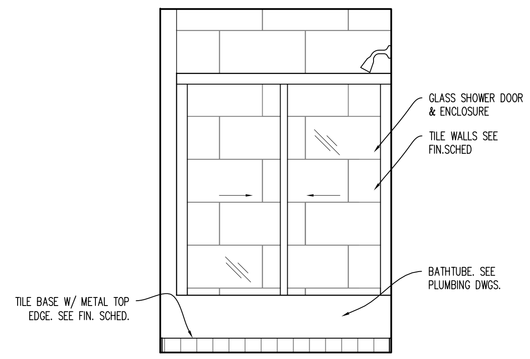

ELEVATION 11 A313(2)
SCALE: 1/2" = 1'-0"

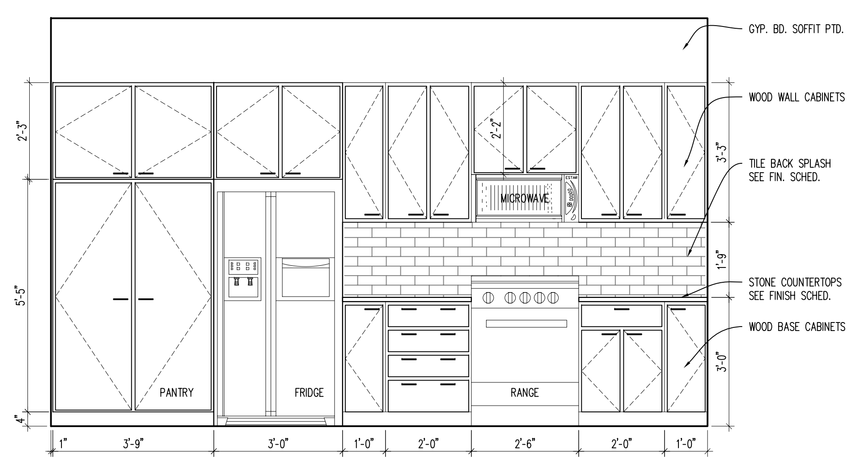

ELEVATION 12 A313(2)
SCALE: 1/2" = 1'-0"

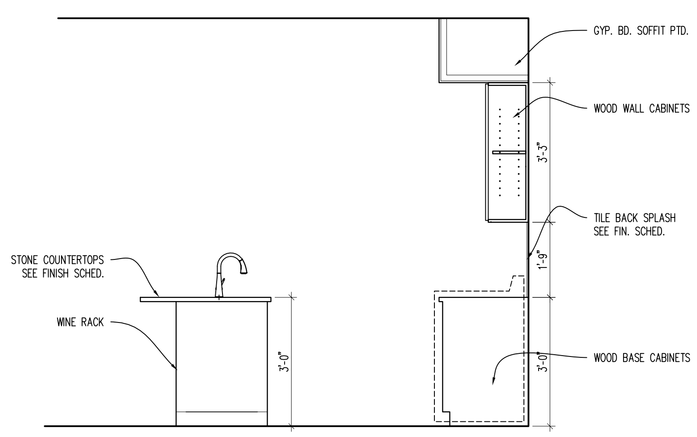

ELEVATION 13 A313(2)
SCALE: 1/2" = 1'-0"

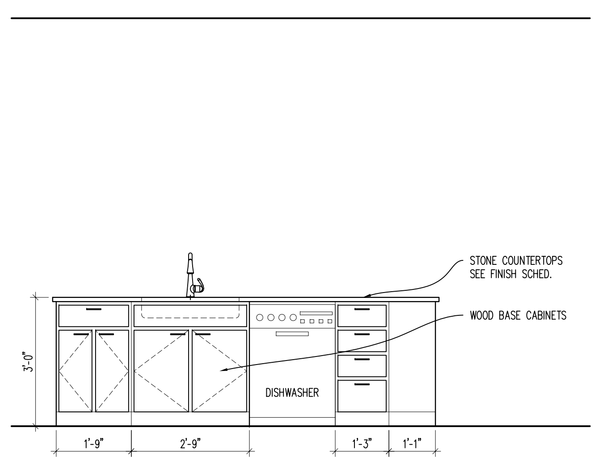

ELEVATION 14 A313(2)
SCALE: 1/2" = 1'-0"

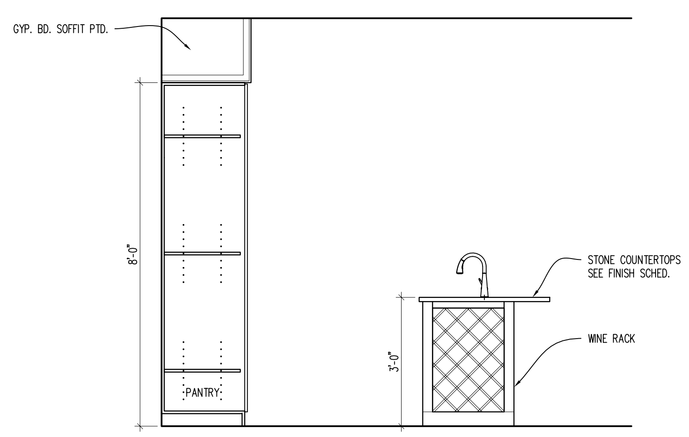

ELEVATION 15 A313(2)
SCALE: 1/2" = 1'-0"

STATE OF OHIO
JOSEPH A. BODKIN
513557
REGISTERED ARCHITECT
Joseph A. Bodkin, License #513557
Expiration Date: 12.31.2023

modelgroup
DEVELOPMENT • CONSTRUCTION • MANAGEMENT
1826 Race Street
Cincinnati, Ohio 45202
513.559.0048

Formica Building

Office/Apartments

Auditor Address: 115 E. 5th Street, Actual Address: 120 E. 4th Street
Cincinnati OH 45202

No.	Revisions	Date
2	ENG CHG #1	11.14.2022

Project: Formica Building
115 E 5th Street
Cincinnati, Ohio 45202
Sheet Title: UPA N
Construction
Project No: 2022_259
Issue Date
Scale: As Noted
Drawn
Checked

A313 (2)

APPROVED
CIN BD
2022P03573
02/01/23
cityof CINCINNATI BUILDINGS & INSPECTIONS

Plot Date/Time: Nov 15, 2022-8:34am – By: jbodkin
Floor 13.dwg-A313 – N (2)_Formica_A300 – Phase C – From: ten1\03_PHASE CV.CADx – Phase C – From: ten1\

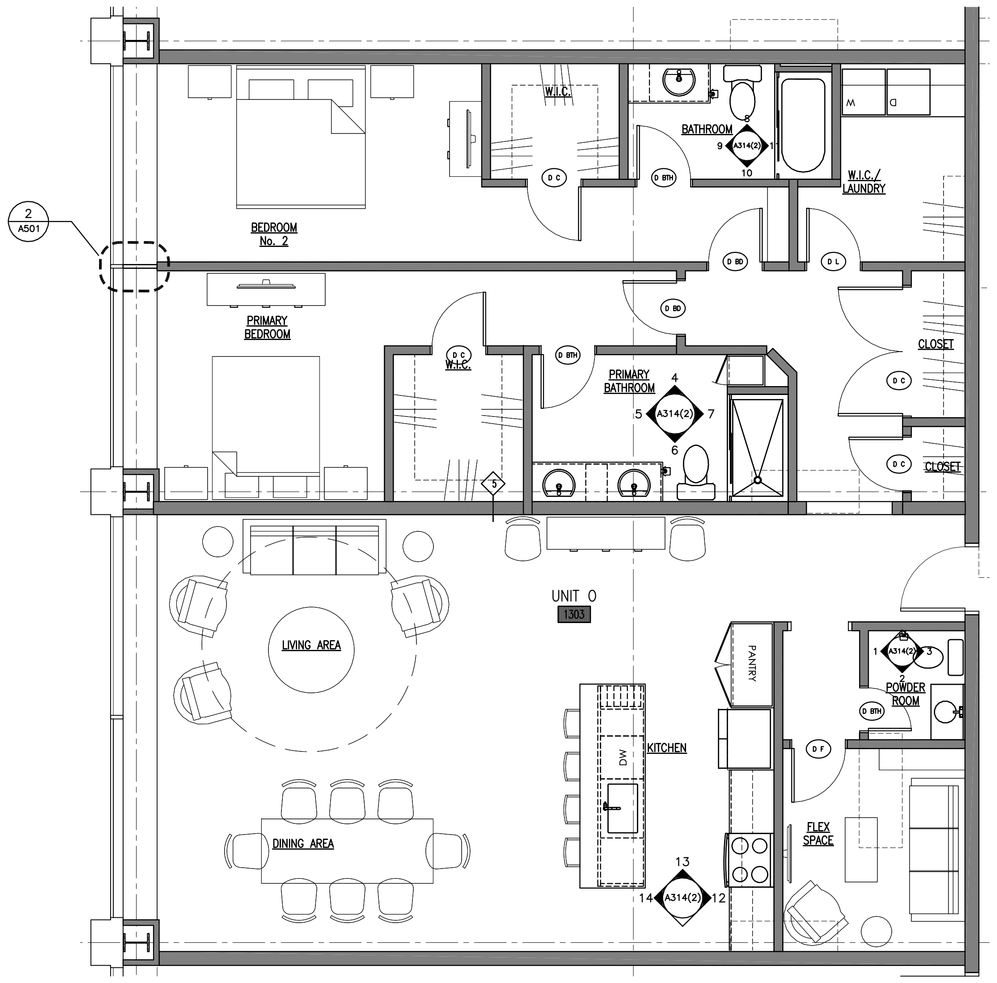

APARTMENT FLOOR PLAN
SCALE: 1/4" = 1'-0"
1 A314(1)

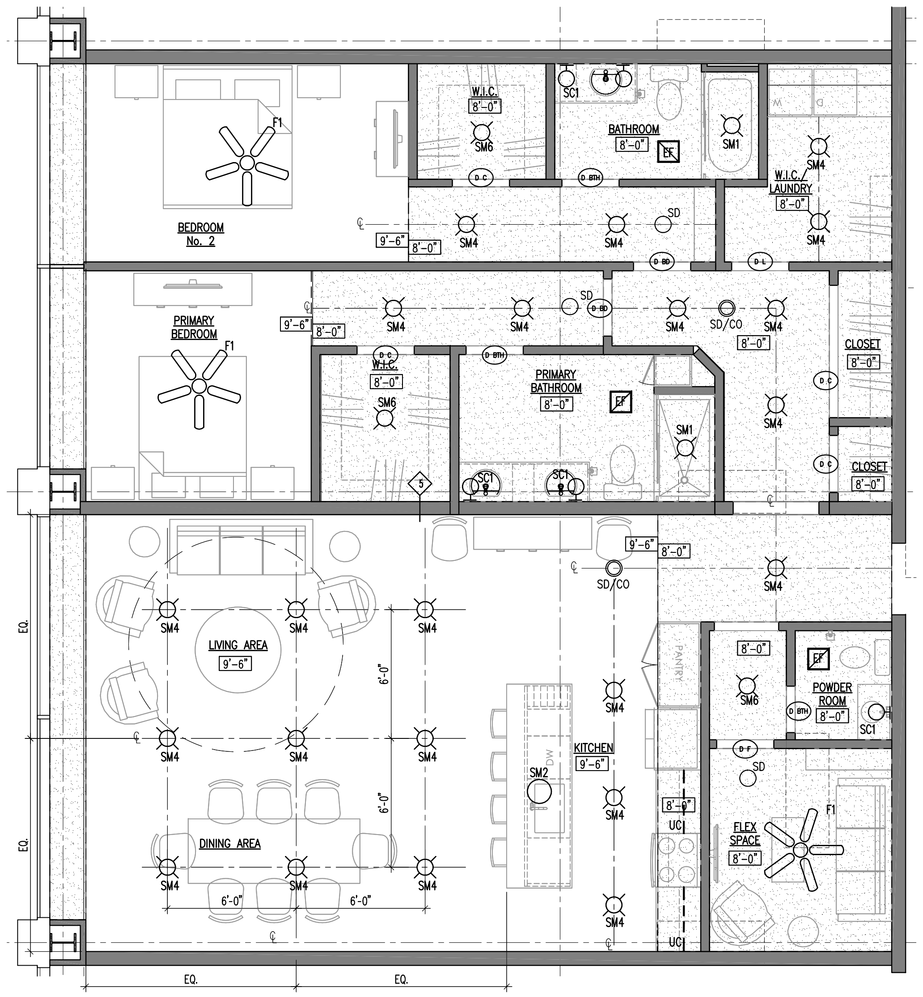

APARTMENT REFLECTED CEILING PLAN
SCALE: 1/4" = 1'-0"
2 A314(1)

GENERAL APARTMENT NOTES

A. DOOR FRAME SHALL BE 4" FROM FACE OF WALL TO BACKSIDE OF FRAME U.N.O.
B. ALL NEW UNIT PARTITIONS ARE TYPE 3 U.N.O.
C. DIMENSIONS ARE FROM FINISH FACE OF WALL TO FINISH FACE OF WALL U.N.O.
D. CENTER ALL CLOSET DOORS ON CLOSETS U.N.O.
E. ALL LIGHTING FOR REFERENCE ONLY.
F. ALL CABINET DRAWINGS ARE FOR DESIGN INTENT ONLY. CABINET MAKER TO SUBMIT DETAILED SHOP DRAWINGS FOR REVIEW. BASIS OF DESIGN ARE SMART CABINETS
I. ALL VISIBLE SIDES OF CABINETS ARE TO RECEIVE A FINISHED PANEL THAT MATCHES THE CABINETS. THIS INCLUDES CABINETS THAT ARE UP AGAINST THE RADIATORS AND/OR FACING THE WINDOWS. TYP OF ALL.
J. ALL APPLIANCES IN THE APARTMENT UNITS WILL BE NEW ENERGY STAR APPLIANCES.
K. PROVIDE BLOCKING FOR FUTURE GRAB BARS IN ALL UNIT BATHROOMS.
L. ALL PANTRY AND LINEN CLOSETS TO RECEIVE FIVE (5) ADJUSTABLE MELAMINE SHELVES.
M. ALL CLOSETS TO RECEIVE ONE (1) MELAMINE SHELF AND COAT ROD. U.N.O.
N. EACH SHOWER TO BE PROVIDED W/ GLASS SHOWER DOOR.
O. PROVIDE AND INSTALL IN EACH APARTMENT (2) TOWEL BARS, (1) TOILET PAPER HOLDER, (1) ROBE HOOK.

APARTMENT ROOM FINISH SCHEDULE

ROOM NAME	FLOOR	BASE	WALLS NORTH	WALLS SOUTH	WALLS EAST	WALLS WEST	CEILING	REMARKS	REV. NO.
LIVING / DINING AREA	VP-1	RB-3	PT-1	PT-1	PT-1	PT-1	PT-3	NOTES: A	
KITCHEN	VP-1	RB-3	PT-1	PT-1	PT-1	PT-1	PT-3	NOTES: A	
CLOSETS / LAUNDRY	VP-1	RB-3	PT-1	PT-1	PT-1	PT-1	PT-3	NOTES: A	
FLEX SPACE	VP-1	RB-3	PT-1	PT-1	PT-1	PT-1	PT-3	NOTES: A	
BEDROOM	VP-1	RB-3	PT-1	PT-1	PT-1	PT-1	PT-3	NOTES: A	
BATHROOM	VP-1	RB-3	PT-1	PT-1	PT-1	PT-1	PT-3	NOTES: A	
POWDER ROOM	VP-1	RB-3	PT-1	PT-1	PT-1	PT-1	PT-3	NOTES: A	

NOTES:
A. ALL TRIM, CASINGS, DOORS, ETC ARE TO BE PAINTED. COLOR & SHEEN TBD.

APARTMENT DOOR SCHEDULE

DOOR MARK	DOOR LOCATION	DOOR INFORMATION SIZE WIDTH	HEIGHT	THICK	STYLE	DOOR MATERIAL	FRAME INFORMATION TYPE	FRAME MATERIAL	DETAIL HEAD	JAMB	OTHER	HDW. SET	FIRE RATING	REMARKS
D BR (x2)	BEDROOM	2'-8"	6'-8"	1 3/8"	2	OAK	A	WD	5/A600	6/A600	–	2	–	PRE-HUNG STAINED
D BTH (x2)	BATHROOM	2'-8"	6'-8"	1 3/8"	2	OAK	A	WD	5/A600	6/A600	–	2	–	PRE-HUNG STAINED
D C (x3)	CLOSET / WALK IN	2'-8"	6'-8"	1 3/8"	2	OAK	A	WD	5/A600	6/A600	–	3	–	PRE-HUNG STAINED
D L (x1)	LAUNDRY	2'-8"	6'-8"	1 3/8"	2	OAK	A	WD	5/A600	6/A600	–	4	–	PRE-HUNG STAINED
D C (x1)	CLOSET	(3'-1"x2) 6'-2"	6'-8"	1 3/8"	2	OAK	A	WD	5/A600	6/A600	–	3	–	PRE-HUNG STAINED
D F (x1)	FLEX SPACE	2'-8"	6'-8"	1 3/8"	2	OAK	A	WD	5/A600	6/A600	–	3	–	PRE-HUNG STAINED
D BTH (x1)	POWDER ROOM	2'-2"	6'-8"	1 3/8"	2	OAK	A	WD	5/A600	6/A600	–	2	–	PRE-HUNG STAINED

STATE OF OHIO JOSEPH A. BODKIN 513557 REGISTERED ARCHITECT
Joseph A. Bodkin, License #513557
Expiration Date: 12.31.2023

modelgroup
DEVELOPMENT • CONSTRUCTION • MANAGEMENT
1826 Race Street
Cincinnati, Ohio 45202
513.559.0048

Formica Building

Office/Apartments
Auditor Address: 115 E. 5th Street, Actual Address: 120 E. 4th Street
Cincinnati OH 45202

No.	Revisions	Date
1		11.14.2022

Project: Formica Building
115 E 5th Street
Cincinnati, Ohio 45202
Sheet Title: Unit O
Construction
Project No: 2022_259
Issue Date
Scale: As Noted
Drawn
Checked
ENG CHG #1

A314 (1)

APPROVED
CIN BD
2022P03573
02/01/23
cityof CINCINNATI BUILDINGS & INSPECTIONS

C:\Users\jbodkin\Desktop\Formica Building\Formica Building_from 1st1_PHASE CY24Qs - Phase C - From 1st1\03_Formica A300 - Floor 13.dwg-A314 - O. Plot Date/Time: Nov 15, 2022-8:35am - By: jbodkin

GENERAL APARTMENT NOTES

A. DOOR FRAME SHALL BE 4" FROM FACE OF WALL TO BACKSIDE OF FRAME U.N.O.
B. ALL NEW UNIT PARTITIONS ARE TYPE 3 U.N.O.
C. DIMENSIONS ARE FROM FINISH FACE OF WALL TO FINISH FACE OF WALL U.N.O.
D. CENTER ALL CLOSET DOORS ON CLOSETS U.N.O.
E. ALL LIGHTING FOR REFERENCE ONLY.
F. ALL CABINET DRAWINGS ARE FOR DESIGN INTENT ONLY. CABINET MAKER TO SUBMIT DETAILED SHOP DRAWINGS FOR REVIEW. BASIS OF DESIGN ARE SMART CABINETS
I. ALL VISIBLE SIDES OF CABINETS ARE TO RECEIVE A FINISHED PANEL THAT MATCHES THE CABINETS. THIS INCLUDES CABINETS THAT ARE UP AGAINST THE RADIATORS AND/OR FACING THE WINDOWS. TYP OF ALL.
J. ALL APPLIANCES IN THE APARTMENT UNITS WILL BE NEW ENERGY STAR APPLIANCES.
K. PROVIDE BLOCKING FOR FUTURE GRAB BARS IN ALL UNIT BATHROOMS.
L. ALL PANTRY AND LINEN CLOSETS TO RECEIVE FIVE (5) ADJUSTABLE MELAMINE SHELVES.
M. ALL CLOSETS TO RECEIVE ONE (1) MELAMINE SHELF AND COAT ROD. U.N.O.
N. EACH SHOWER TO BE PROVIDED W/ GLASS SHOWER DOOR.
O. PROVIDE AND INSTALL IN EACH APARTMENT (2) TOWEL BARS, (1) TOILET PAPER HOLDER, (1) ROBE HOOK.

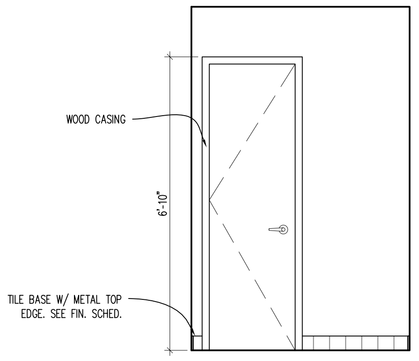

ELEVATION 1 A314(2)
SCALE: 1/2" = 1'-0"

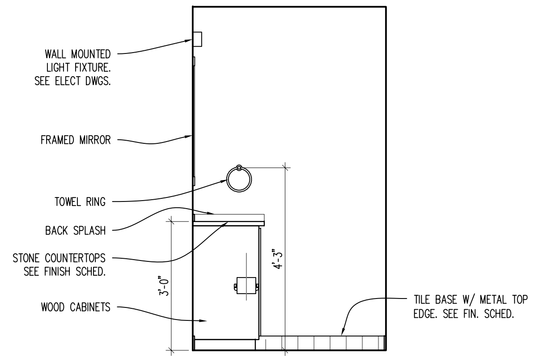

ELEVATION 2 A314(2)
SCALE: 1/2" = 1'-0"

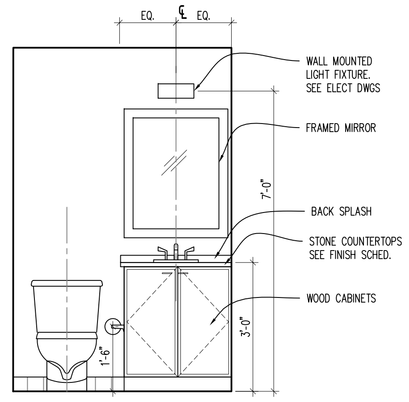

ELEVATION 3 A314(2)
SCALE: 1/2" = 1'-0"

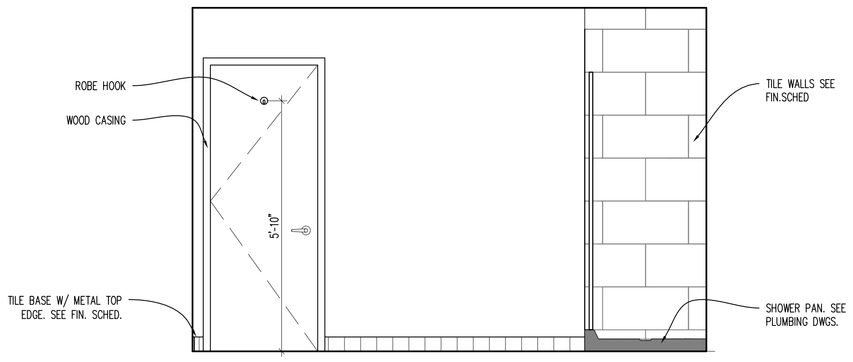

ELEVATION 4 A314(2)
SCALE: 1/2" = 1'-0"

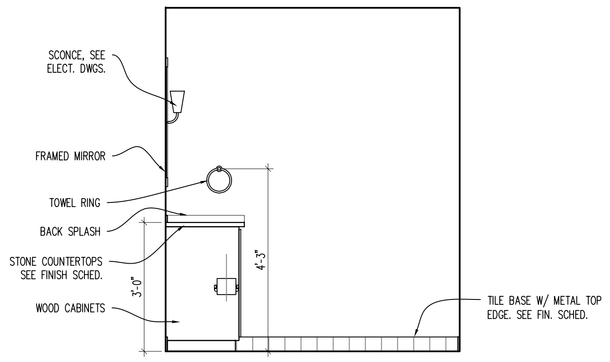

ELEVATION 5 A314(2)
SCALE: 1/2" = 1'-0"

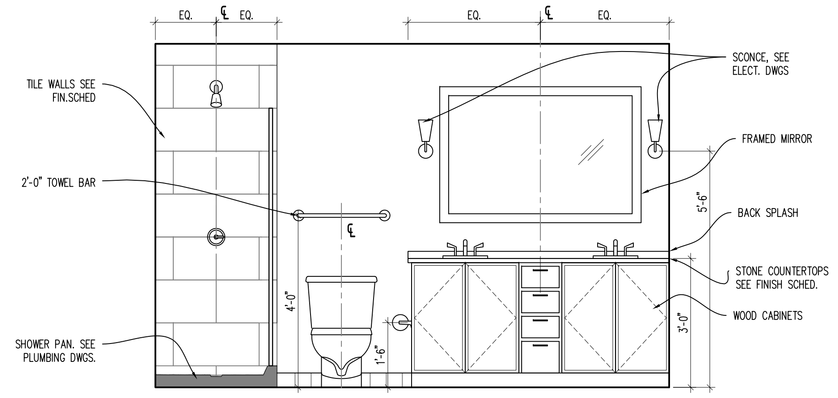

ELEVATION 6 A314(2)
SCALE: 1/2" = 1'-0"

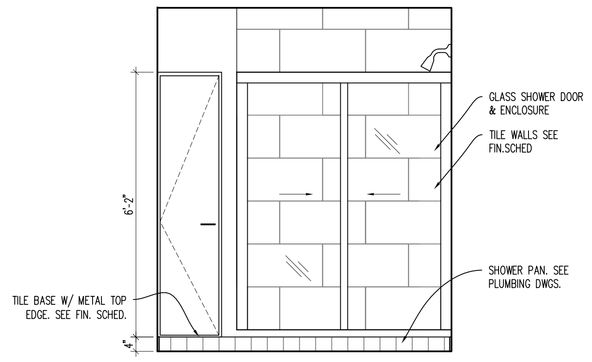

ELEVATION 7 A314(2)
SCALE: 1/2" = 1'-0"

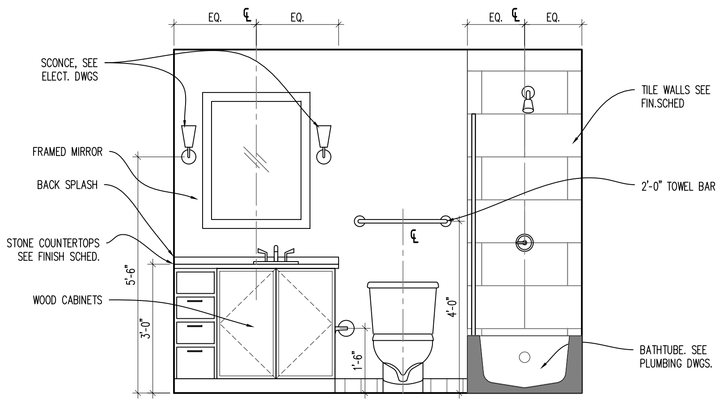

ELEVATION 8 A314(2)
SCALE: 1/2" = 1'-0"

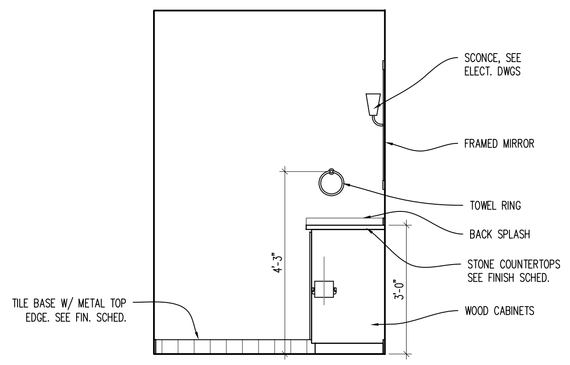

ELEVATION 9 A314(2)
SCALE: 1/2" = 1'-0"

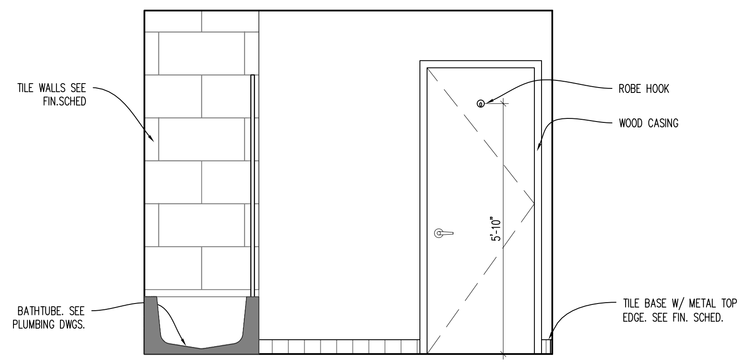

ELEVATION 10 A314(2)
SCALE: 1/2" = 1'-0"

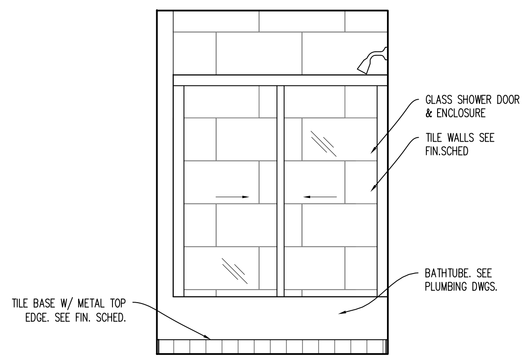

ELEVATION 11 A314(2)
SCALE: 1/2" = 1'-0"

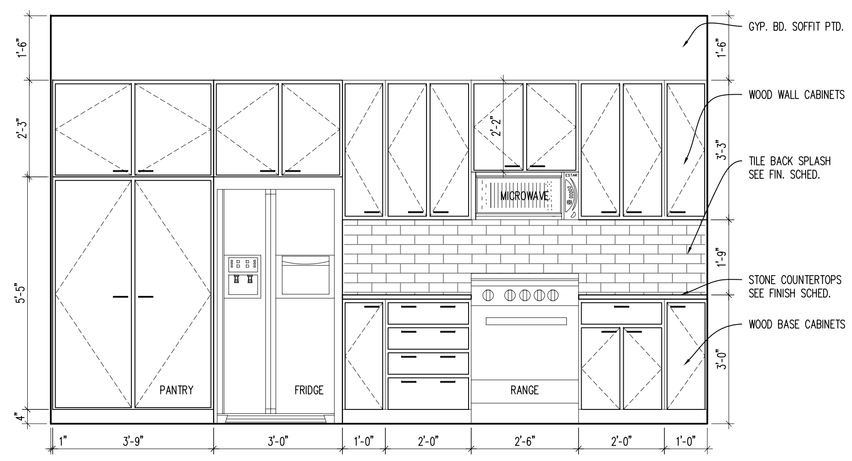

ELEVATION 12 A314(2)
SCALE: 1/2" = 1'-0"

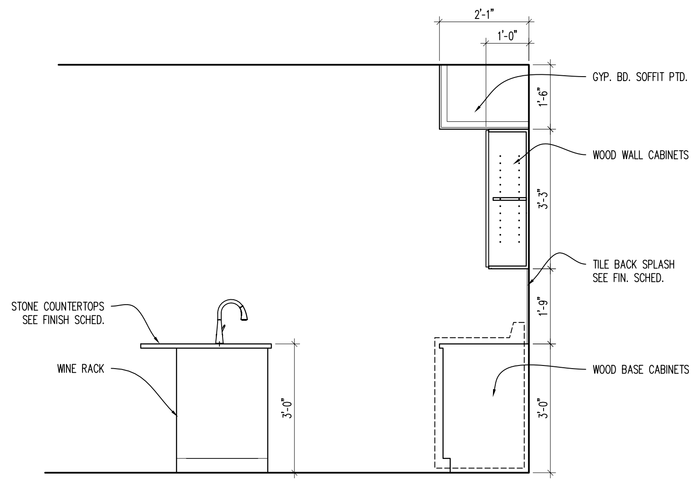

ELEVATION 13 A314(2)
SCALE: 1/2" = 1'-0"

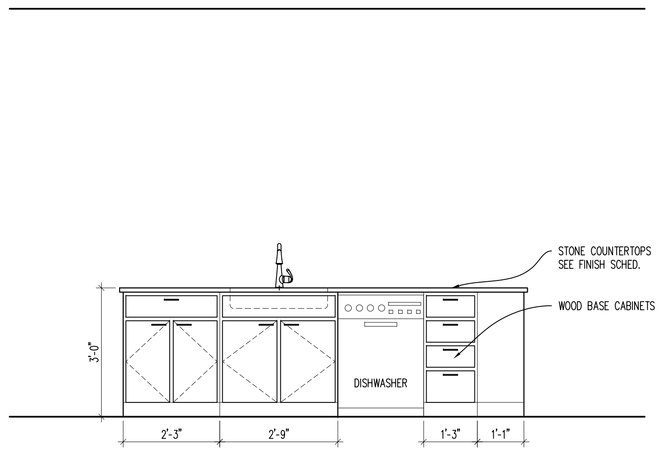

ELEVATION 14 A314(2)
SCALE: 1/2" = 1'-0"

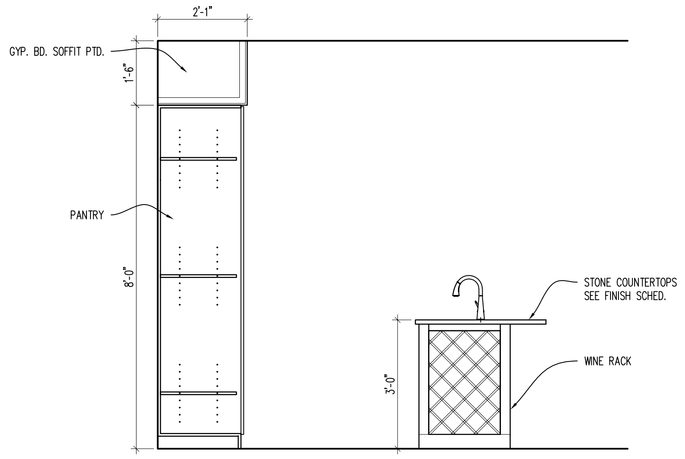

ELEVATION 15 A314(2)
SCALE: 1/2" = 1'-0"

STATE OF OHIO JOSEPH A. BODKIN 3135567 REGISTERED ARCHITECT
Joseph A. Bodkin, License #3135567
Expiration Date: 12.31.2023

modelgroup
DEVELOPMENT • CONSTRUCTION • MANAGEMENT
1826 Race Street
Cincinnati, Ohio 45202
513.559.0048

Formica Building
Office/Apartments
Auditor Address: 115 E. 5th Street, Actual Address: 120 E. 4th Street
Cincinnati OH 45202

No.	Revisions	Date
2	ENG CHG #1	11.14.2022

Project: Formica Building
115 E 5th Street
Cincinnati, Ohio 45202
Sheet: UNIT O
Construction
Issue Date
Project No: 2022_259
Scale: As Noted
Drawn
Checked

A314 (2)

APPROVED
CIN BD
2022P03573
02/01/23
city of CINCINNATI BUILDINGS & INSPECTIONS

C:\Users\jbodkin\Dropbox\01_MBG_Projects\01_From 1st\1_PHASE C\CADs - Phase C - From 1st\03_Formica_A300 - Floor 13.dwg-A314 - O (2), Plot Date/Time: Nov 15, 2022-8:37am - By: jbodkin

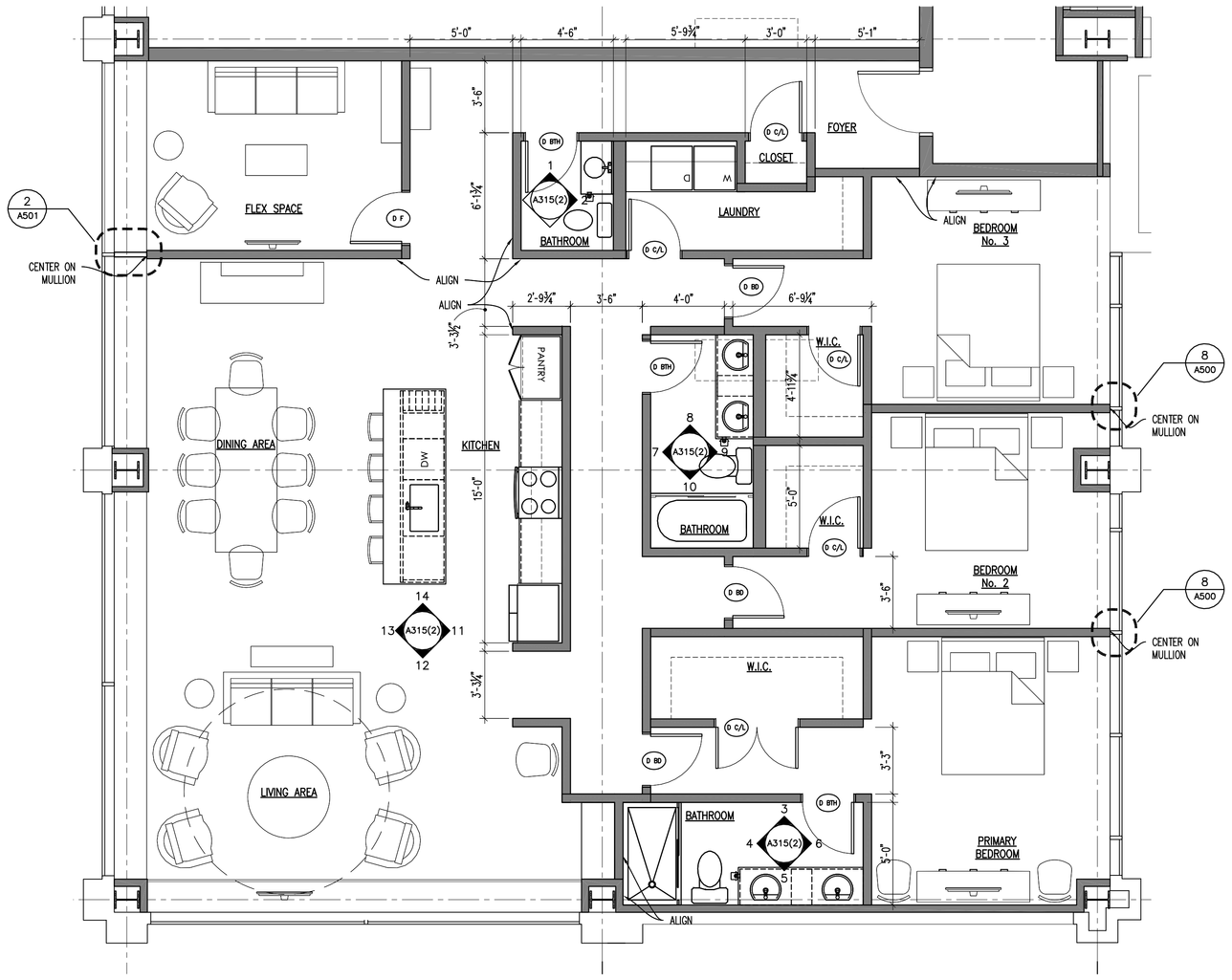

APARTMENT FLOOR PLAN
SCALE: 1/4" = 1'-0"

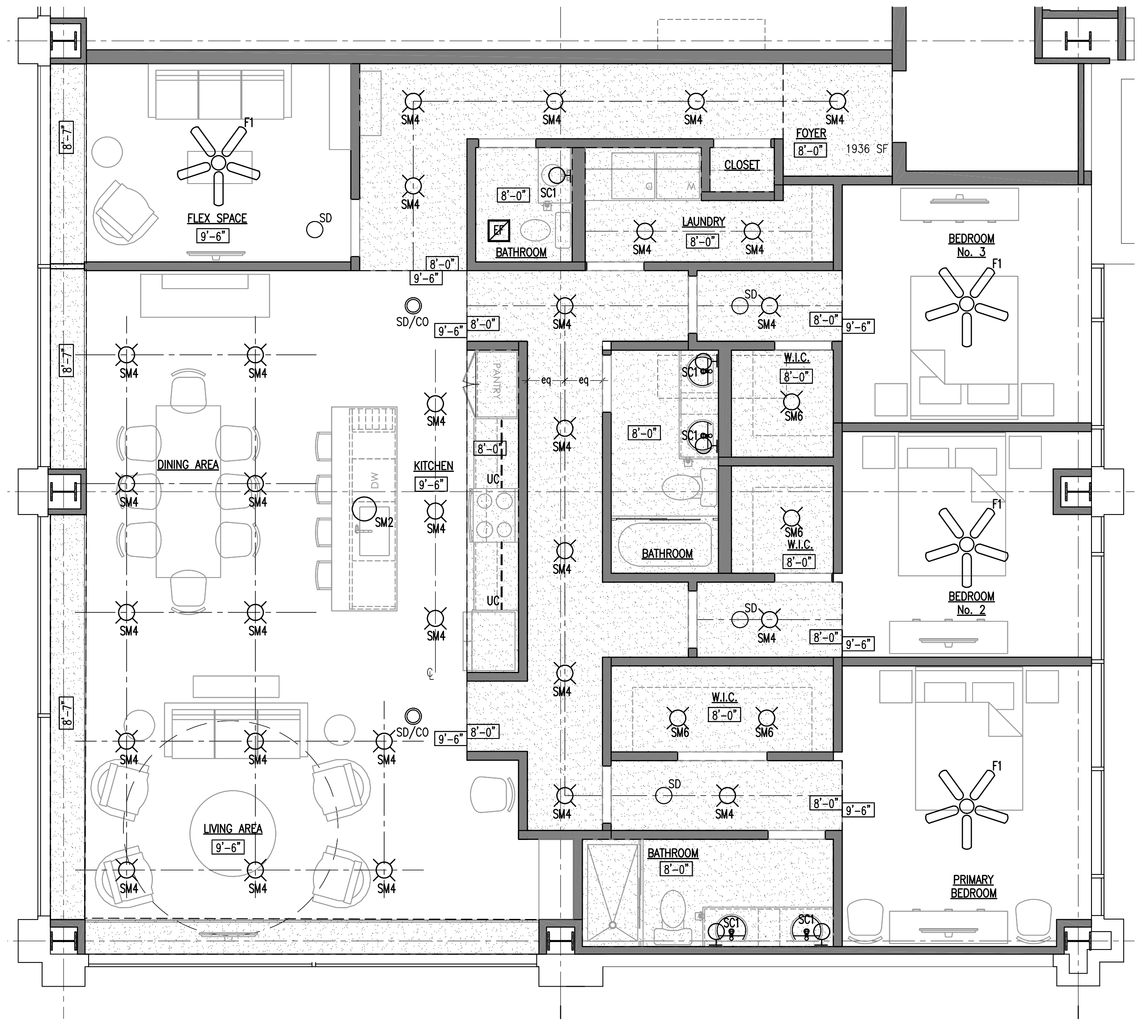

APARTMENT REFLECTED CEILING PLAN
SCALE: 1/4" = 1'-0"

GENERAL APARTMENT NOTES

A. DOOR FRAME SHALL BE 4" FROM FACE OF WALL TO BACKSIDE OF FRAME U.N.O.
B. ALL NEW UNIT PARTITIONS ARE TYPE 3 U.N.O.
C. DIMENSIONS ARE FROM FINISH FACE OF WALL TO FINISH FACE OF WALL U.N.O.
D. CENTER ALL CLOSET DOORS ON CLOSETS U.N.O.
E. ALL LIGHTING FOR REFERENCE ONLY.
F. ALL CABINET DRAWINGS ARE FOR DESIGN INTENT ONLY. CABINET MAKER TO SUBMIT DETAILED SHOP DRAWINGS FOR REVIEW. BASIS OF DESIGN ARE SMART CABINETS.
I. ALL VISIBLE SIDES OF CABINETS ARE TO RECEIVE A FINISHED PANEL THAT MATCHES THE CABINETS. THIS INCLUDES CABINETS THAT ARE UP AGAINST THE RADIATORS AND/OR FACING THE WINDOWS. TYP OF ALL.
J. ALL APPLIANCES IN THE APARTMENT UNITS WILL BE NEW ENERGY STAR APPLIANCES.
K. PROVIDE BLOCKING FOR FUTURE GRAB BARS IN ALL UNIT BATHROOMS.
L. ALL PANTRY AND LINEN CLOSETS TO RECEIVE FIVE (5) ADJUSTABLE MELAMINE SHELVES.
M. ALL CLOSETS TO RECEIVE ONE (1) MELAMINE SHELF AND COAT ROD. U.N.O.
N. EACH SHOWER TO BE PROVIDED W/ GLASS SHOWER DOOR.
O. PROVIDE AND INSTALL IN EACH APARTMENT (2) TOWEL BARS, (1) TOILET PAPER HOLDER, (1) ROBE HOOK.

APARTMENT ROOM FINISH SCHEDULE

ROOM NAME	FLOOR	BASE	WALLS NORTH	WALLS SOUTH	WALLS EAST	WALLS WEST	CEILING	REMARKS	REV. NO.
LIVING / DINING AREA	VP-1	RB-3	PT-1	PT-1	PT-1	PT-1	PT-3	NOTES: A	
KITCHEN	VP-1	RB-3	PT-1	PT-1	PT-1	PT-1	PT-3	NOTES: A	
CLOSETS / LAUNDRY	VP-1	RB-3	PT-1	PT-1	PT-1	PT-1	PT-3	NOTES: A	
FLEX SPACE	VP-1	RB-3	PT-1	PT-1	PT-1	PT-1	PT-3	NOTES: A	
BEDROOM	VP-1	RB-3	PT-1	PT-1	PT-1	PT-1	PT-3	NOTES: A	
BATHROOM	VP-1	RB-3	PT-1	PT-1	PT-1	PT-1	PT-3	NOTES: A	
POWDER ROOM	VP-1	RB-3	PT-1	PT-1	PT-1	PT-1	PT-3	NOTES: A	
FOYER	VP-1	RB-3	PT-1	PT-1	PT-1	PT-1	PT-3	NOTES: A	

NOTES:
A. ALL TRIM, CASINGS, DOORS, ETC ARE TO BE PAINTED. COLOR & SHEEN TBD.

APARTMENT DOOR SCHEDULE

DOOR MARK	DOOR LOCATION	DOOR INFORMATION SIZE WIDTH	HEIGHT	THICK	STYLE	DOOR MATERIAL	FRAME INFORMATION TYPE	FRAME MATERIAL	DETAIL HEAD	JAMB	OTHER	HDW. SET	FIRE RATING	REMARKS
D BR (x3)	BEDROOM	2'-8"	6'-8"	1 3/8"	2	OAK	A	WD	5/A600	6/A600	–	2	–	PRE-HUNG STAINED
D BTH (x3)	BATHROOM	2'-8"	6'-8"	1 3/8"	2	OAK	A	WD	5/A600	6/A600	–	2	–	PRE-HUNG STAINED
D C/L (x3)	CLOSET	2'-8"	6'-8"	1 3/8"	2	OAK	A	WD	5/A600	6/A600	–	3	–	PRE-HUNG STAINED
D C/L (x1)	LAUNDRY	2'-8"	6'-8"	1 3/8"	2	OAK	A	WD	5/A600	6/A600	–	4	–	PRE-HUNG STAINED
D C/L (x1)	WALK IN CLOSET	(2'-1"x2) 4'-2"	6'-8"	1 3/8"	2	OAK	A	WD	5/A600	6/A600	–	3	–	PRE-HUNG STAINED
D F (x1)	FLEX SPACE	2'-8"	6'-8"	1 3/8"	2	OAK	A	WD	5/A600	6/A600	–	3	–	PRE-HUNG STAINED

STATE OF OHIO JOSEPH A. BODKIN 3153567 REGISTERED ARCHITECT
Joseph A. Bodkin, License #3153567
Expiration Date: 12.31.2023

modelgroup
DEVELOPMENT • CONSTRUCTION • MANAGEMENT
1826 Race Street
Cincinnati, Ohio 45202
513.559.0048

Formica Building

Office/Apartments
Auditor Address: 115 E. 5th Street, Actual Address: 120 E. 4th Street
Cincinnati OH 45202

No.	Revisions	Date
4		
3		
2	ENG CHG #1	11.14.2022
1		

Project: Formica Building
115 E 5th Street
Cincinnati, Ohio 45202
Sheet: UX P
Construction
Project No: 2022_259
Issue Date
Scale: As Noted
Drawn
Checked

A315 (1)

APPROVED
CIN BD
2022P03573
02/01/23
city of CINCINNATI BUILDINGS & INSPECTIONS

C:\Users\jbodkin\Dropbox\01_WORK_Projects\03_Formica_A300 - Floor 13.dwg-A315 - P. Plot Date/Time: Nov 15, 2022-8:30am - By: jbodkin
G:\from 1en1_PHASE C\CADs - Phase C - From 1en1\03_Formica_A300 - Floor 13.dwg-A315 - P. Plot Date/Time: Nov 15, 2022-8:30am - By: jbodkin

GENERAL APARTMENT NOTES

A. DOOR FRAME SHALL BE 4" FROM FACE OF WALL TO BACKSIDE OF FRAME U.N.O.
B. ALL NEW UNIT PARTITIONS ARE TYPE 3 U.N.O.
C. DIMENSIONS ARE FROM FINISH FACE OF WALL TO FINISH FACE OF WALL U.N.O.
D. CENTER ALL CLOSET DOORS ON CLOSETS U.N.O.
E. ALL LIGHTING FOR REFERENCE ONLY.
F. ALL CABINET DRAWINGS ARE FOR DESIGN INTENT ONLY. CABINET MAKER TO SUBMIT DETAILED SHOP DRAWINGS FOR REVIEW. BASIS OF DESIGN ARE SMART CABINETS
I. ALL VISIBLE SIDES OF CABINETS ARE TO RECEIVE A FINISHED PANEL THAT MATCHES THE CABINETS. THIS INCLUDES CABINETS THAT ARE UP AGAINST THE RADIATORS AND/OR FACING THE WINDOWS. TYP OF ALL.
J. ALL APPLIANCES IN THE APARTMENT UNITS WILL BE NEW ENERGY STAR APPLIANCES.
K. PROVIDE BLOCKING FOR FUTURE GRAB BARS IN ALL UNIT BATHROOMS.
L. ALL PANTRY AND LINEN CLOSETS TO RECEIVE FIVE (5) ADJUSTABLE MELAMINE SHELVES.
M. ALL CLOSETS TO RECEIVE ONE (1) MELAMINE SHELF AND COAT ROD. U.N.O.
N. EACH SHOWER TO BE PROVIDED W/ GLASS SHOWER DOOR.
O. PROVIDE AND INSTALL IN EACH APARTMENT (2) TOWEL BARS, (1) TOILET PAPER HOLDER, (1) ROBE HOOK.

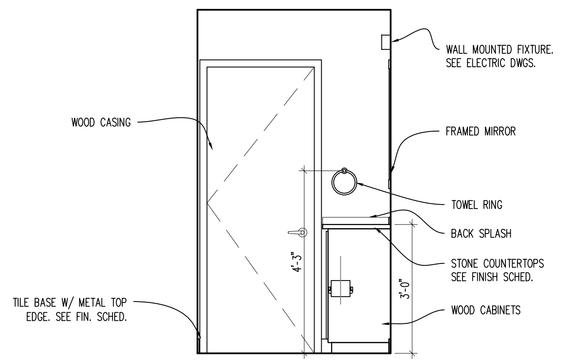

ELEVATION 1 A315(2)
SCALE: 1/2" = 1'-0"

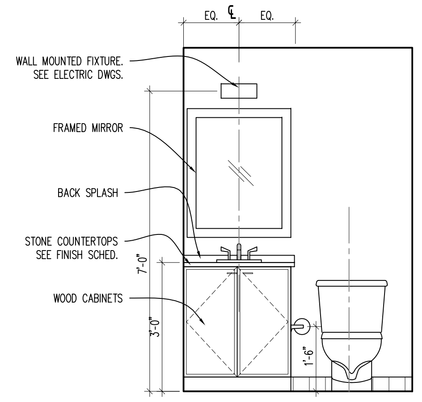

ELEVATION 2 A315(2)
SCALE: 1/2" = 1'-0"

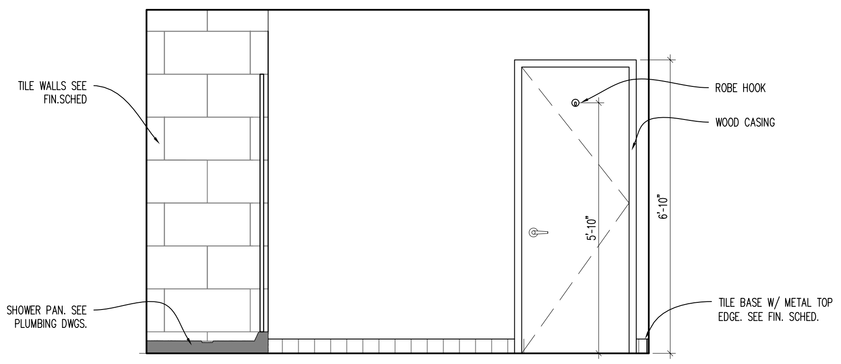

ELEVATION 3 A315(2)
SCALE: 1/2" = 1'-0"

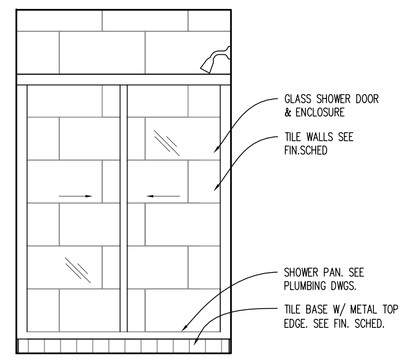

ELEVATION 4 A315(2)
SCALE: 1/2" = 1'-0"

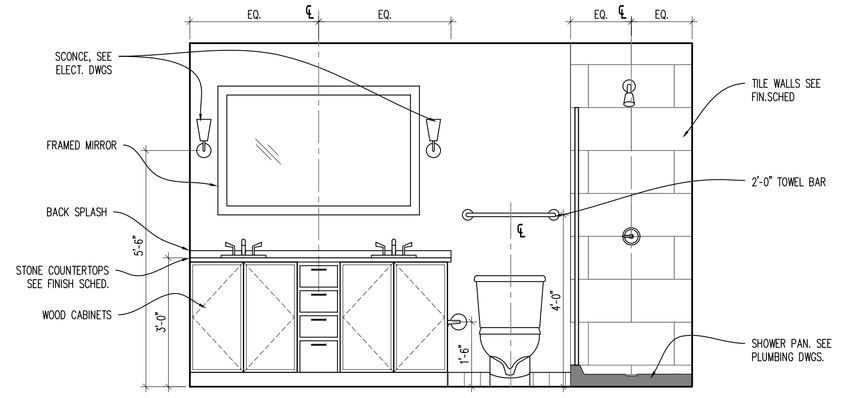

ELEVATION 5 A315(2)
SCALE: 1/2" = 1'-0"

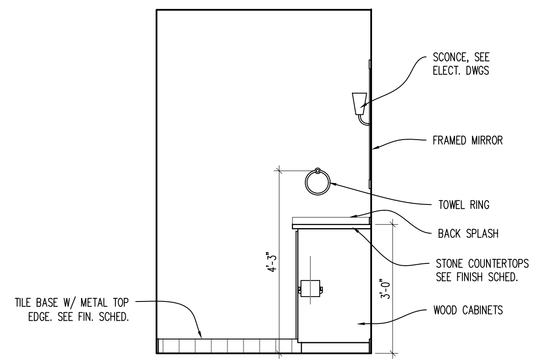

ELEVATION 6 A315(2)
SCALE: 1/2" = 1'-0"

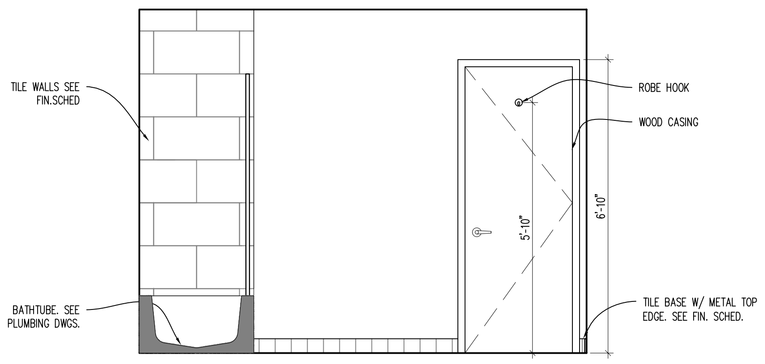

ELEVATION 7 A315(2)
SCALE: 1/2" = 1'-0"

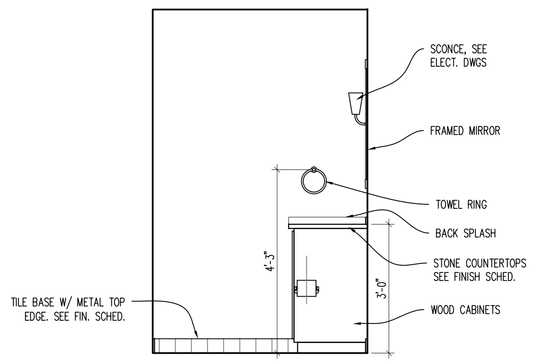

ELEVATION 8 A315(2)
SCALE: 1/2" = 1'-0"

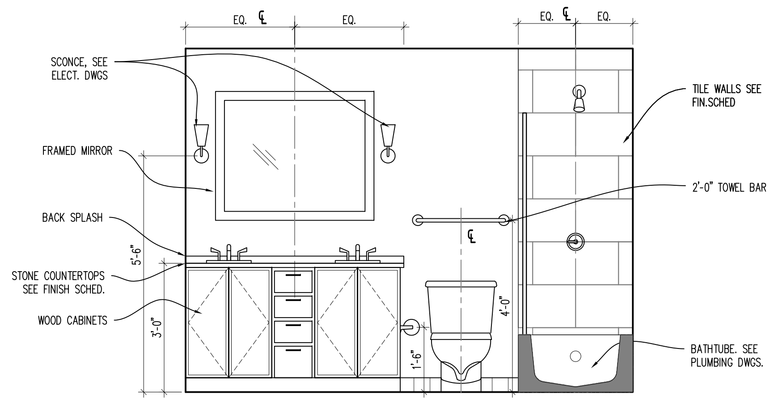

ELEVATION 9 A315(2)
SCALE: 1/2" = 1'-0"

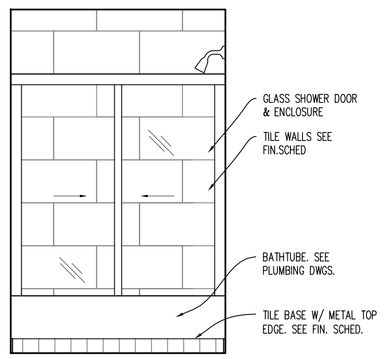

ELEVATION 10 A315(2)
SCALE: 1/2" = 1'-0"

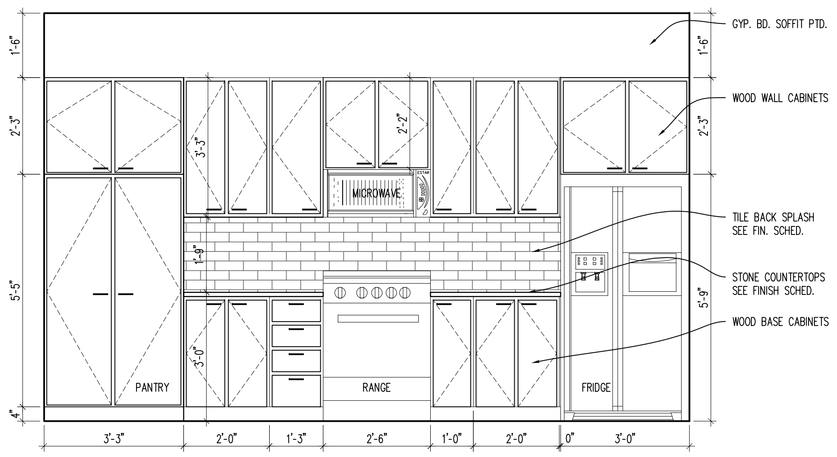

ELEVATION 11 A315(2)
SCALE: 1/2" = 1'-0"

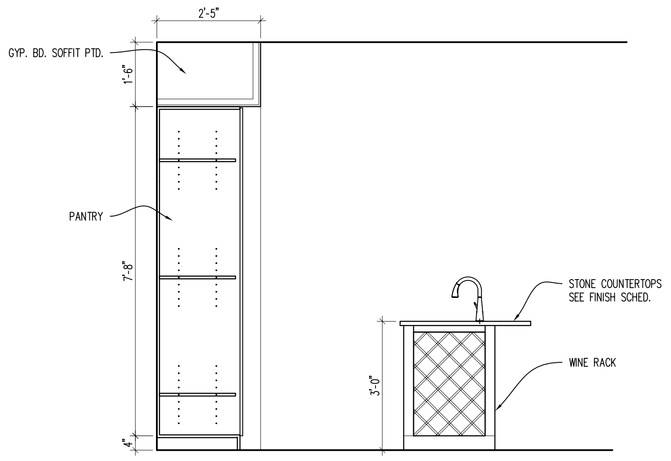

ELEVATION 12 A315(2)
SCALE: 1/2" = 1'-0"

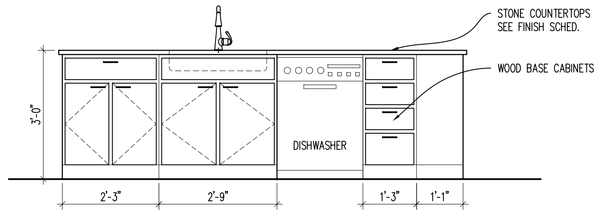

ELEVATION 13 A315(2)
SCALE: 1/2" = 1'-0"

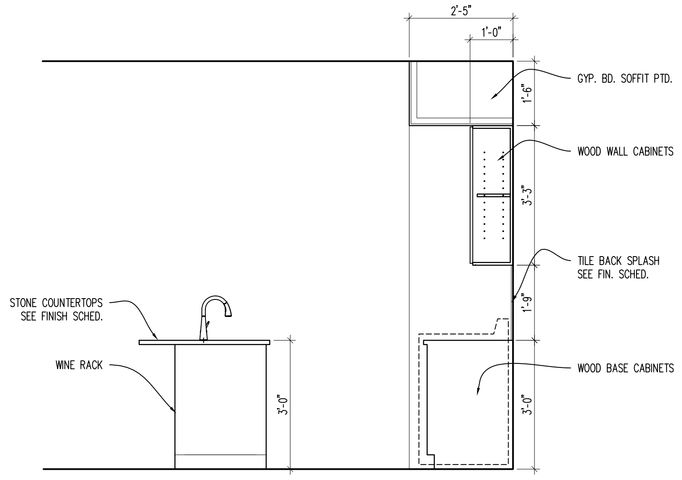

ELEVATION 14 A315(2)
SCALE: 1/2" = 1'-0"

STATE OF OHIO JOSEPH A. BODKIN 3135567 REGISTERED ARCHITECT
Joseph A. Bodkin, License #3135567
Expiration Date: 12.31.2023

modelgroup
DEVELOPMENT • CONSTRUCTION • MANAGEMENT
1826 Race Street
Cincinnati, Ohio 45202
513.559.0048

Formica Building
Office/Apartments
Auditor Address: 115 E. 5th Street, Actual Address: 120 E. 4th Street
Cincinnati OH 45202

No.	Revisions	Date
2	ENG CHG #1	11.14.2022

Project: Formica Building
115 E 5th Street
Cincinnati, Ohio 45202
Sheet: UPK O
Construction
Issue Date
Project No: 2022_259
Scale: As Noted
Drawn
Checked

A315 (2)

APPROVED
CIN BD
2022P03573
02/01/23
city of CINCINNATI BUILDINGS & INSPECTIONS

C:\Users\jbodkin\Dropbox\01_WORK_Projects\03_Formica_A300 - Floor 13.dwg-A315 - P (2), Plot Date/Time: Nov 15, 2022-8:39am - By: jbodkin
G:\from 1en1_PHASE C\CADs - Phase C - From 1en1\03_Formica_A300 - Floor 13.dwg-A315 - P (2), Plot Date/Time: Nov 15, 2022-8:39am - By: jbodkin

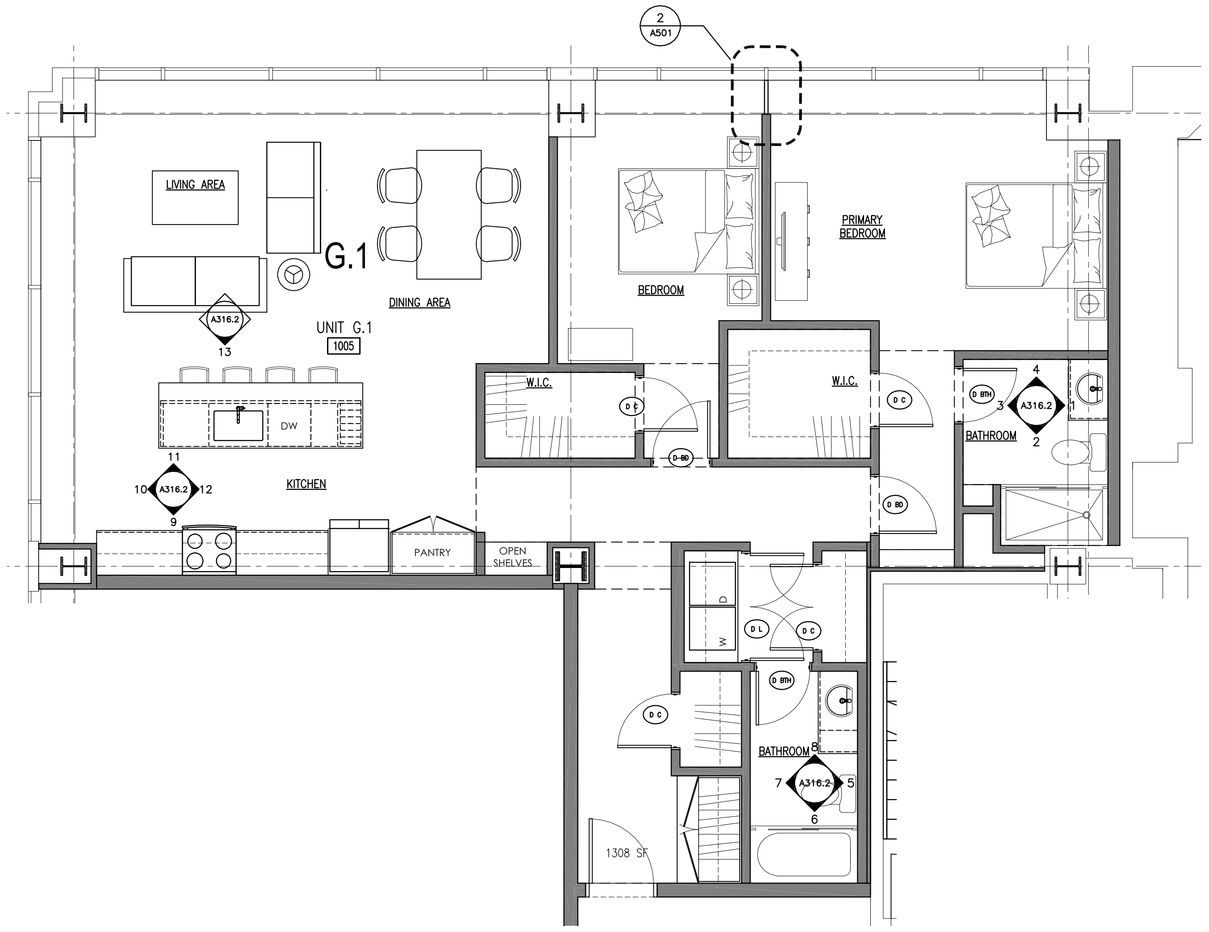

APARTMENT FLOOR PLAN
SCALE: 1/4" = 1'-0"
1 A316.1

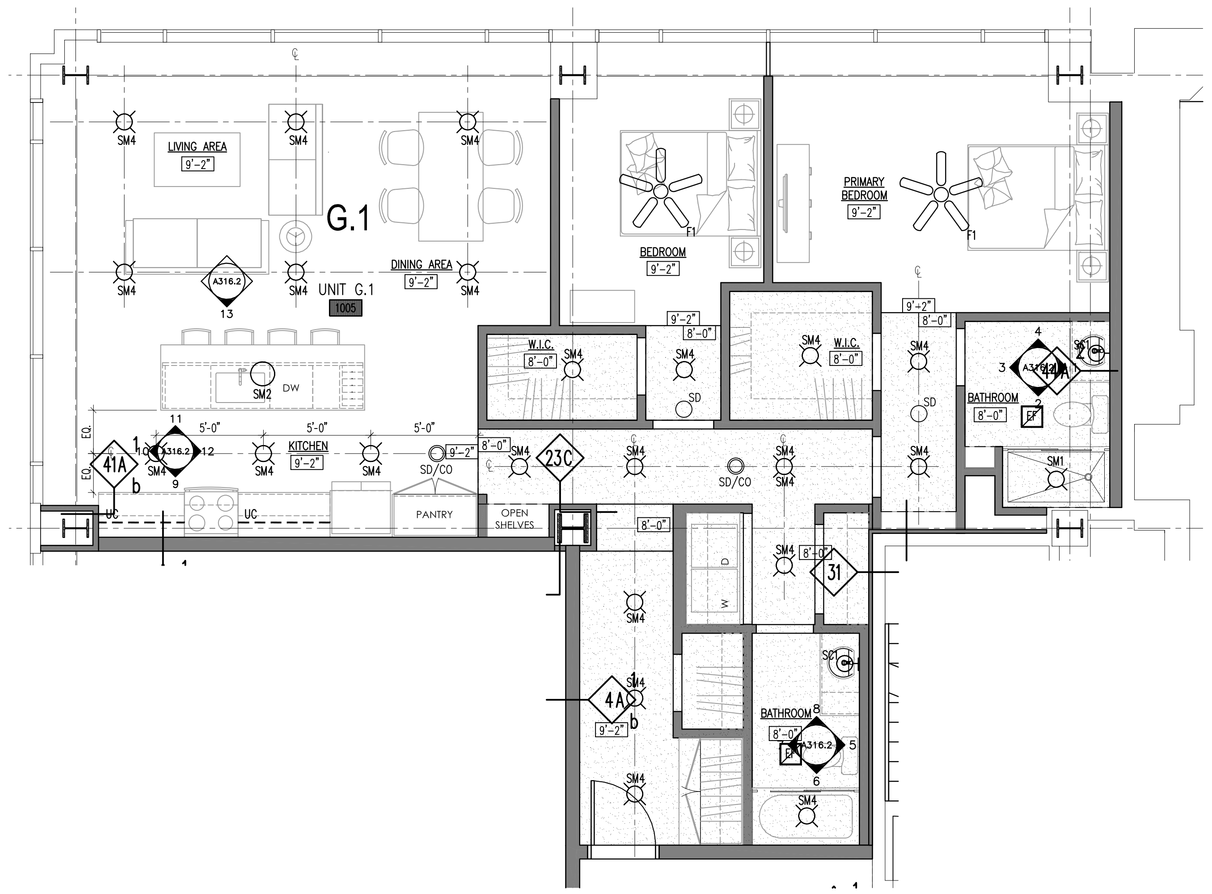

APARTMENT REFLECTED CEILING PLAN
SCALE: 1/4" = 1'-0"
2 A316.1

GENERAL APARTMENT NOTES

A. DOOR FRAME SHALL BE 4" FROM FACE OF WALL TO BACKSIDE OF FRAME U.N.O.
B. ALL NEW UNIT PARTITIONS ARE TYPE 3 U.N.O.
C. DIMENSIONS ARE FROM FINISH FACE OF WALL TO FINISH FACE OF WALL U.N.O.
D. CENTER ALL CLOSET DOORS ON CLOSETS U.N.O.
E. ALL LIGHTING FOR REFERENCE ONLY.
F. ALL CABINET DRAWINGS ARE FOR DESIGN INTENT ONLY. CABINET MAKER TO SUBMIT DETAILED SHOP DRAWINGS FOR REVIEW. BASIS OF DESIGN ARE SMART CABINETS
I. ALL VISIBLE SIDES OF CABINETS ARE TO RECEIVE A FINISHED PANEL THAT MATCHES THE CABINETS. THIS INCLUDES CABINETS THAT ARE UP AGAINST THE RADIATORS AND/OR FACING THE WINDOWS. TYP OF ALL.
J. ALL APPLIANCES IN THE APARTMENT UNITS WILL BE NEW ENERGY STAR APPLIANCES.
K. PROVIDE BLOCKING FOR FUTURE GRAB BARS IN ALL UNIT BATHROOMS.
L. ALL PANTRY AND LINEN CLOSETS TO RECEIVE FIVE (5) ADJUSTABLE MELAMINE SHELVES.
M. ALL CLOSETS TO RECEIVE ONE (1) MELAMINE SHELF AND COAT ROD. U.N.O.
N. EACH SHOWER TO BE PROVIDED W/ GLASS SHOWER DOOR.
O. PROVIDE AND INSTALL IN EACH APARTMENT (2) TOWEL BARS, (1) TOILET PAPER HOLDER, (1) ROBE HOOK.

LIGHTING LEGEND

FOR ALL LIGHTING CONTACT:
KZSA CONTROLS & LIGHTING
RICK KRUEGER
513.813.0633

1?	SURFACE TBD
2?	SURFACE TBD
SM3	SURFACE 6" ROUND
SM1	SURFACE 4" ROUND
SM10	DECORATIVE SURFACE MOUNTED ALLOWANCE: $300
V1	VANITY WALL LIGHT
SC1	VANITY SCONCE LIGHT
F1	36" CEILING FAN
F2	42" CEILING FAN
UC	UNDER CABINET LIGHT

APARTMENT ROOM FINISH SCHEDULE

ROOM NAME	FLOOR	BASE	WALLS NORTH	WALLS SOUTH	WALLS EAST	WALLS WEST	CEILING	REMARKS	REV. NO.
LIVING AREA	VP-1	RB-3	PT-1	PT-1	PT-1	PT-1	PT-3	NOTES: A	
DINING AREA	VP-1	RB-3	PT-1	PT-1	PT-1	PT-1	PT-3	NOTES: A	
KITCHEN	VP-1	RB-3	PT-1	PT-1	PT-1	PT-1	PT-3	NOTES: A	
BATHROOM	CT-1	CTB-1	PT-1	PT-1	PT-1	PT-1	PT-3	NOTES: A	
FOYER / CORRIDOR	VP-1	RB-3	PT-1	PT-1	PT-1	PT-1	PT-3	NOTES: A	
CLOSET	VP-1	RB-3	PT-1	PT-1	PT-1	PT-1	PT-3	NOTES: A	
LAUNDRY	VP-1	RB-3	PT-1	PT-1	PT-1	PT-1	PT-3	NOTES: A	
BEDROOM	VP-1	RB-3	PT-1	PT-1	PT-1	PT-1	PT-3	NOTES: A	
WALK-IN CLOSET	VP-1	RB-3	PT-1	PT-1	PT-1	PT-1	PT-3	NOTES: A	
PRIMARY BEDROOM	VP-1	RB-3	PT-1	PT-1	PT-1	PT-1	PT-3	NOTES: A	
WALK-IN CLOSET	VP-1	RB-3	PT-1	PT-1	PT-1	PT-1	PT-3	NOTES: A	
BATHROOM	CT-1	CTB-1	PT-1	PT-1	PT-1	PT-1	PT-3	NOTES: A	

NOTES:
A. ALL TRIM, CASINGS, DOORS, ETC ARE TO BE PAINTED. COLOR & SHEEN TBD.

APARTMENT DOOR SCHEDULE

DOOR MARK	DOOR LOCATION	DOOR INFORMATION SIZE WIDTH	HEIGHT	THICK	STYLE	DOOR MATERIAL	FRAME INFORMATION TYPE	FRAME MATERIAL	DETAIL HEAD	JAMB	OTHER	HDW. SET	FIRE RATING	REMARKS
D BR (x2)	BEDROOMS	2'-8"	6'-8"	1 3/8"	2	OAK	A	WD	3/A600	4/A600		2	–	PRE-HUNG. STAINED OAK
D BTH (x2)	BATHROOMS	2'-6"	6'-8"	1 3/8"	2	OAK	A	WD	3/A600	4/A600		2	–	PRE-HUNG. STAINED OAK
D C (x3)	CLOSET / W.I.C.	2'-6"	6'-8"	1 3/8"	2	OAK	A	WD	3/A600	4/A600		3	–	PRE-HUNG. STAINED OAK
D L (x1)	LAUNDRY	(2'-6"x2) 5'-0"	6'-8"	1 3/8"	3	OAK	B	WD	3/A600	4/A600		4	–	PRE-HUNG. STAINED OAK
D C (x1)	CLOSET	(2'-0"x2) 4'-0"	6'-8"	1 3/8"	3	OAK	B	WD	3/A600	4/A600		4	–	PRE-HUNG. STAINED OAK

STATE OF OHIO
JOSEPH A. BODKIN
3153567
REGISTERED ARCHITECT
Joseph A. Bodkin, License #3153567
Expiration Date: 12.31.2023

modelgroup
DEVELOPMENT • CONSTRUCTION • MANAGEMENT
1826 Race Street
Cincinnati, Ohio 45202
513.559.0048

Formica Building

Office/Apartments
Auditor Address: 115 E. 5th Street, Actual Address: 120 E. 4th Street
Cincinnati OH 45202

No.	Revisions	Date
4	APARTMENT CHANGE	12.05.2022

Project: Formica Building
115 E 5th Street
Cincinnati, Ohio 45202
Sheet Title: Unit G.1
Construction
Project #: 2022_259
Issue Date
Scale: As Noted
Drawn
Checked

A316.1

APPROVED
CIN BD
2022P03573
02/01/23
city of CINCINNATI
BUILDINGS & INSPECTIONS

C:\Users\jbodkin\Dropbox\01_NMDG_Projects\03_From 1st_PHASE C\CADs - Phase C - From 1st\03_Formica_A300 - Floors 3-10.dwg-316.1 - G.1, Plot Date/Time: Dec 13, 2022-11:11am - By: jbodkin

GENERAL APARTMENT NOTES

A. DOOR FRAME SHALL BE 4" FROM FACE OF WALL TO BACKSIDE OF FRAME U.N.O.
B. ALL NEW UNIT PARTITIONS ARE TYPE 3 U.N.O.
C. DIMENSIONS ARE FROM FINISH FACE OF WALL TO FINISH FACE OF WALL U.N.O.
D. CENTER ALL CLOSET DOORS ON CLOSETS U.N.O.
E. ALL LIGHTING FOR REFERENCE ONLY.
F. ALL CABINET DRAWINGS ARE FOR DESIGN INTENT ONLY. CABINET MAKER TO SUBMIT DETAILED SHOP DRAWINGS FOR REVIEW. BASIS OF DESIGN ARE SMART CABINETS
I. ALL VISIBLE SIDES OF CABINETS ARE TO RECEIVE A FINISHED PANEL THAT MATCHES THE CABINETS. THIS INCLUDES CABINETS THAT ARE UP AGAINST THE RADIATORS AND/OR FACING THE WINDOWS. TYP OF ALL.
J. ALL APPLIANCES IN THE APARTMENT UNITS WILL BE NEW ENERGY STAR APPLIANCES.
K. PROVIDE BLOCKING FOR FUTURE GRAB BARS IN ALL UNIT BATHROOMS.
L. ALL PANTRY AND LINEN CLOSETS TO RECEIVE FIVE (5) ADJUSTABLE MELAMINE SHELVES.
M. ALL CLOSETS TO RECEIVE ONE (1) MELAMINE SHELF AND COAT ROD. U.N.O.
N. EACH SHOWER TO BE PROVIDED W/ GLASS SHOWER DOOR.
O. PROVIDE AND INSTALL IN EACH APARTMENT (2) TOWEL BARS, (1) TOILET PAPER HOLDER, (1) ROBE HOOK.

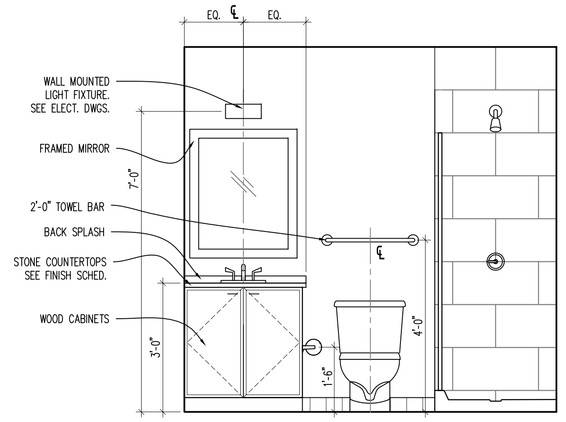

ELEVATION 1 A316.2
SCALE: 1/2" = 1'-0"

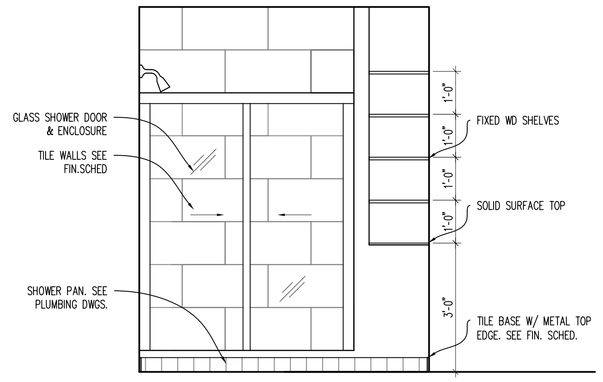

ELEVATION 2 A316.2
SCALE: 1/2" = 1'-0"

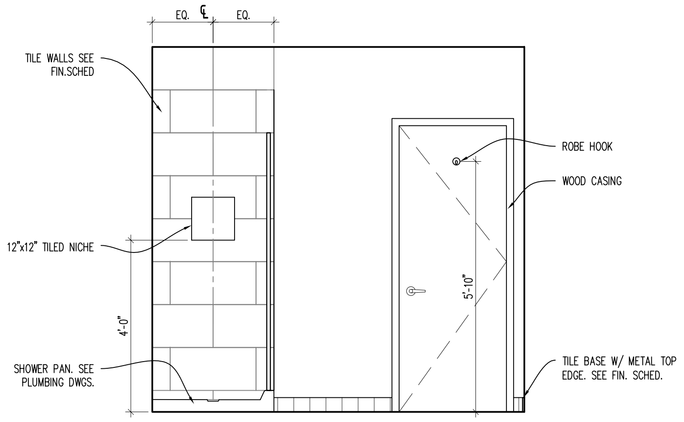

ELEVATION 3 A316.2
SCALE: 1/2" = 1'-0"

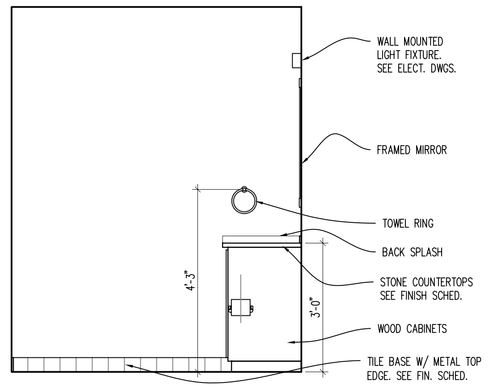

ELEVATION 4 A316.2
SCALE: 1/2" = 1'-0"

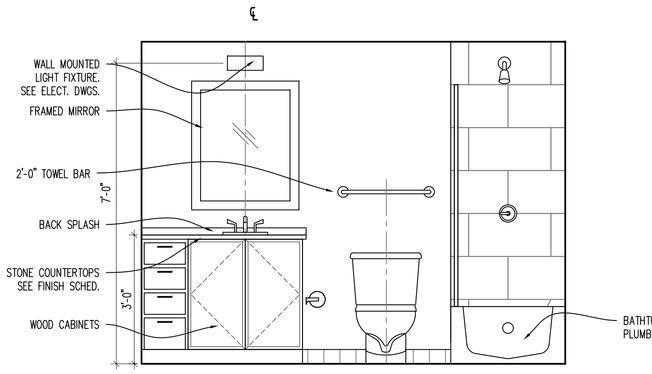

ELEVATION 5 A316.2
SCALE: 1/2" = 1'-0"

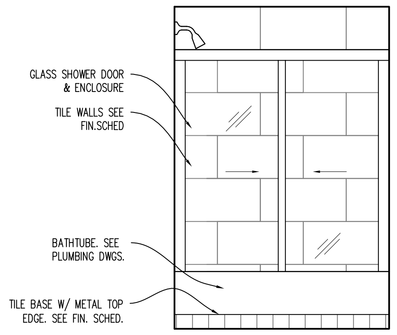

ELEVATION 6 A316.2
SCALE: 1/2" = 1'-0"

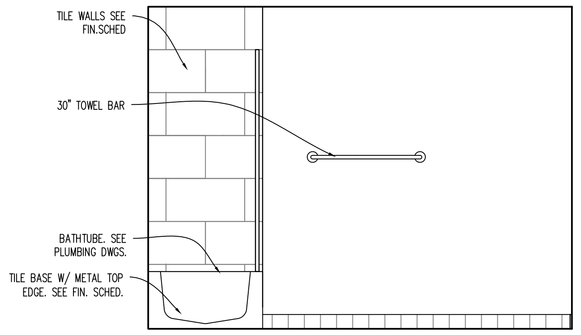

ELEVATION 7 A316.2
SCALE: 1/2" = 1'-0"

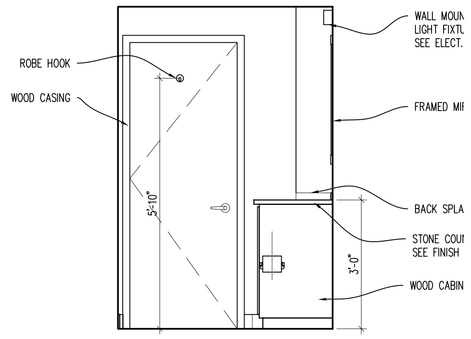

ELEVATION 8 A316.2
SCALE: 1/2" = 1'-0"

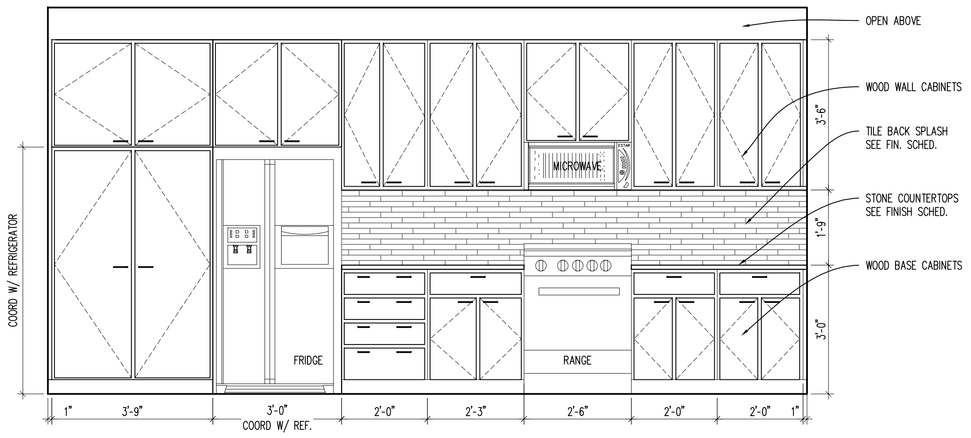

ELEVATION 9 A316.2
SCALE: 1/2" = 1'-0"

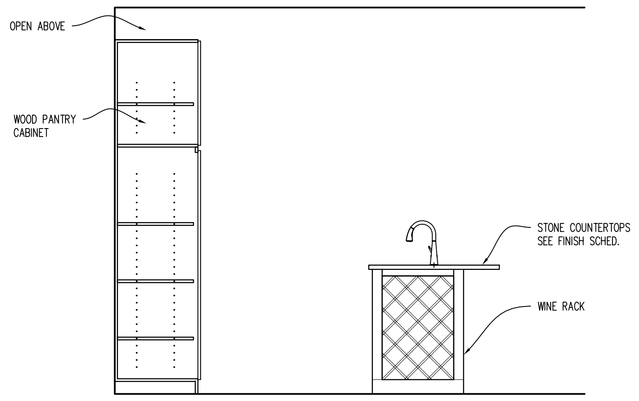

ELEVATION 10 A316.2
SCALE: 1/2" = 1'-0"

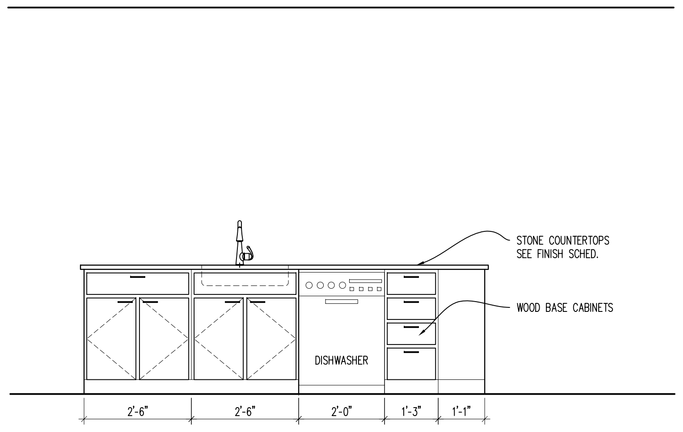

ELEVATION 11 A316.2
SCALE: 1/2" = 1'-0"

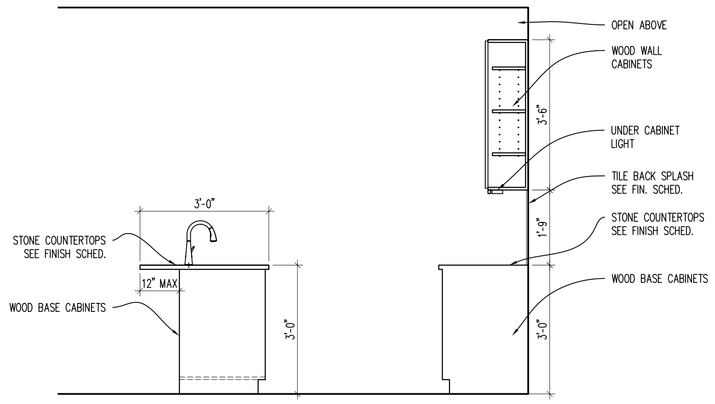

ELEVATION 12 A316.2
SCALE: 1/2" = 1'-0"

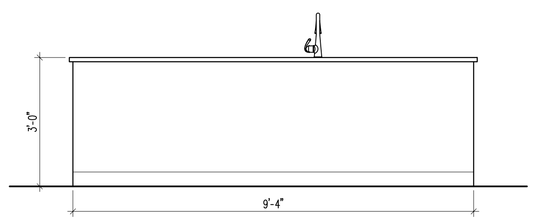

ELEVATION 13 A316.2
SCALE: 1/2" = 1'-0"

STATE OF OHIO
JOSEPH A. BODKIN
3135567
REGISTERED ARCHITECT
Joseph A. Bodkin, License #3135567
Expiration Date: 12.31.2023

modelgroup
DEVELOPMENT • CONSTRUCTION • MANAGEMENT
1826 Race Street
Cincinnati, Ohio 45202
513.559.0048

Formica Building

Office/Apartments

Auditor Address: 115 E. 5th Street, Actual Address: 120 E. 4th Street
Cincinnati OH 45202

No.	Revisions	Date
4	APARTMENT CHANGE	12.05.2022

Project: Formica Building
115 E 5th Street
Cincinnati, Ohio 45202
Sheet Title: Unit 6.1
Construction
Project #: 2022_259
Issue Date
Scale: As Noted
Drawn
Checked

A316.2

APPROVED
CIN BD
2022P03573
02/01/23
city of CINCINNATI
BUILDINGS & INSPECTIONS

C:\Users\jbodkin\Dropbox\01_WORK Projects\3_Formica Building\from Ian_PHASE C\CADs - Phase C - From Ian\03_Formica_A316 - Floors 3-10.dwg-316.2 - G.1, Plot Date/Time: Dec 11, 2022-7:16am - By: jbodkin

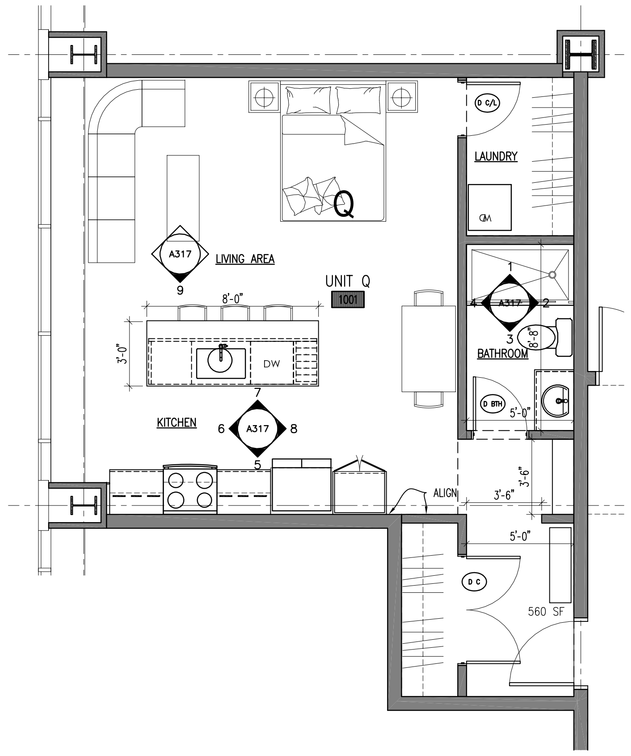

APARTMENT FLOOR PLAN
SCALE: 1/4" = 1'-0" (9 / A317)

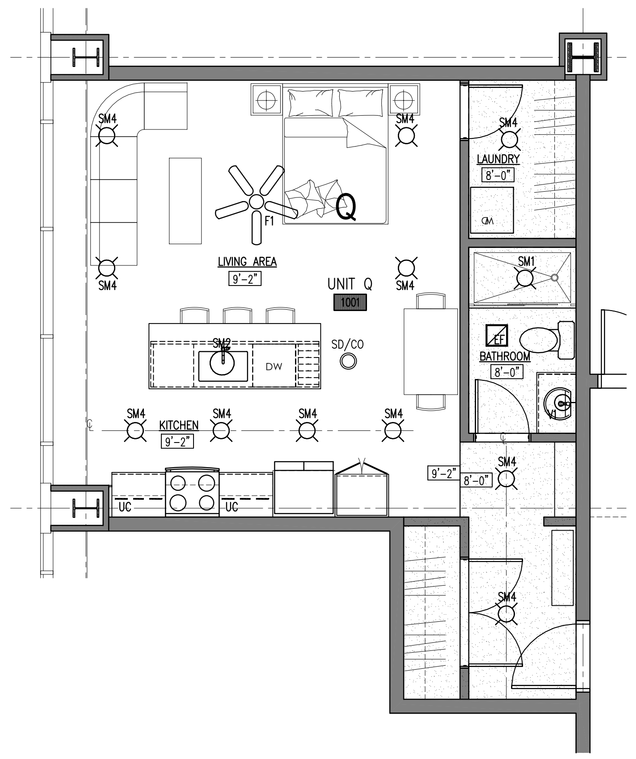

APARTMENT REFLECTED CEILING PLAN
SCALE: 1/4" = 1'-0" (10 / A317)

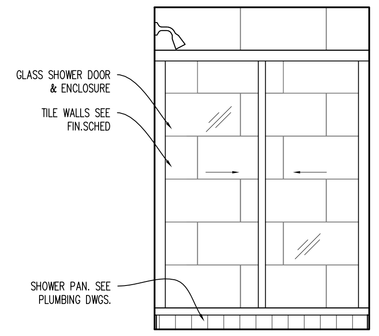

ELEVATION
SCALE: 1/2" = 1'-0" (1 / A317)

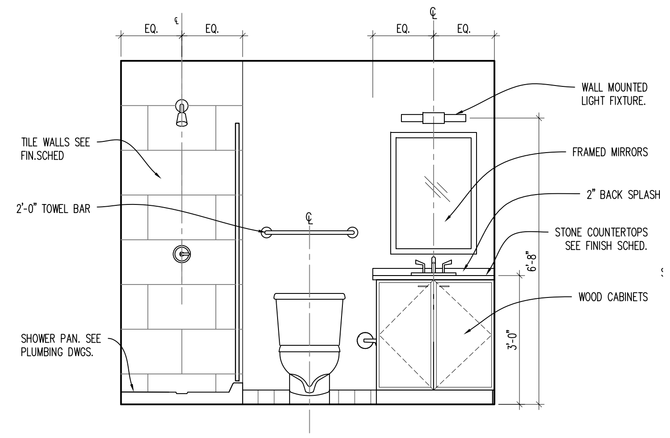

ELEVATION
SCALE: 1/2" = 1'-0" (2 / A317)

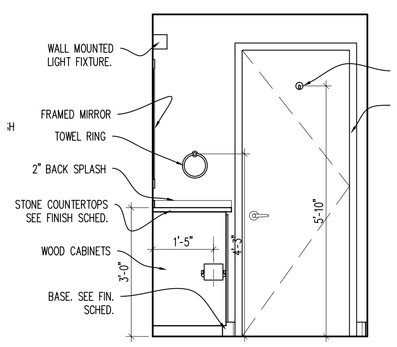

ELEVATION
SCALE: 1/2" = 1'-0" (3 / A317)

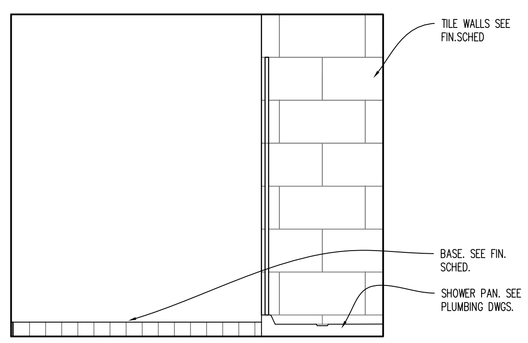

ELEVATION
SCALE: 1/2" = 1'-0" (4 / A317)

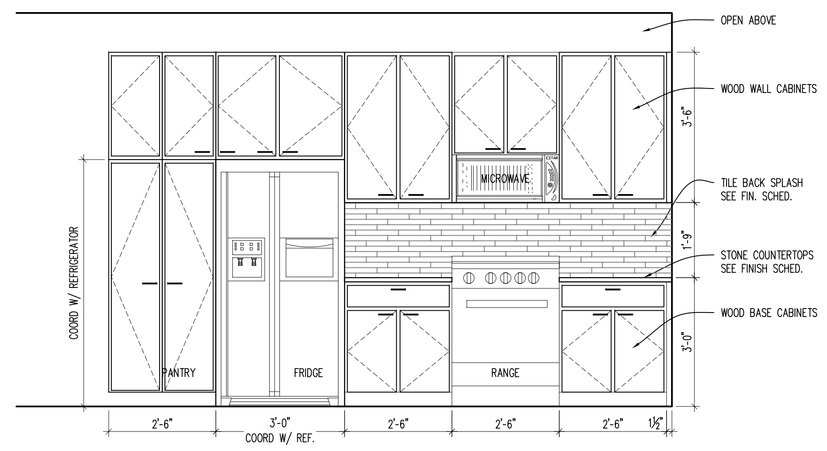

ELEVATION
SCALE: 1/2" = 1'-0" (5 / A317)

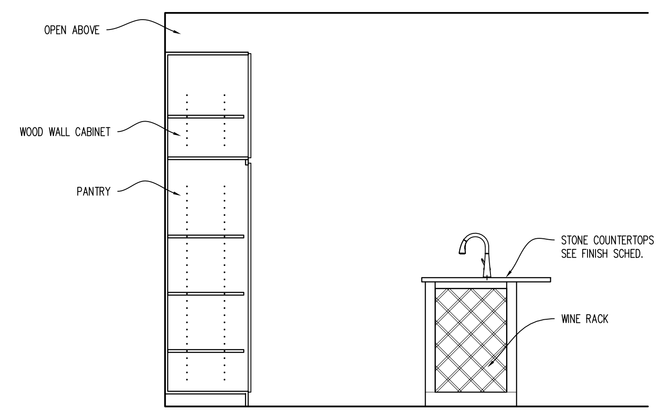

ELEVATION
SCALE: 1/2" = 1'-0" (6 / A317)

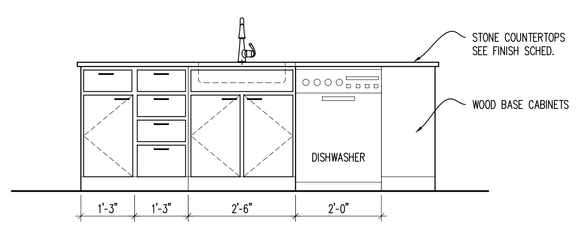

ELEVATION
SCALE: 1/2" = 1'-0" (7 / A317)

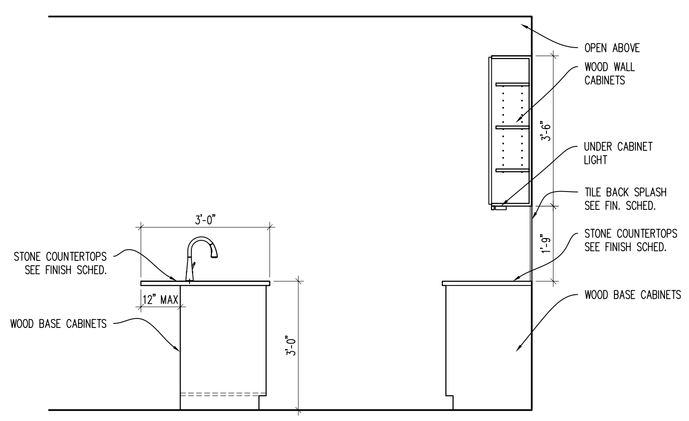

ELEVATION
SCALE: 1/2" = 1'-0" (8 / A317)

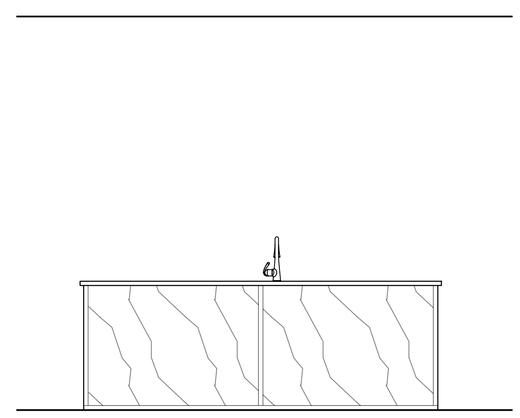

ELEVATION
SCALE: 1/2" = 1'-0" (9 / A317)

GENERAL APARTMENT NOTES

A. DOOR FRAME SHALL BE 4" FROM FACE OF WALL TO BACKSIDE OF FRAME U.N.O.
B. ALL NEW UNIT PARTITIONS ARE TYPE 3 U.N.O.
C. DIMENSIONS ARE FROM FINISH FACE OF WALL TO FINISH FACE OF WALL U.N.O.
D. CENTER ALL CLOSET DOORS ON CLOSETS U.N.O.
E. ALL LIGHTING FOR REFERENCE ONLY.
F. ALL CABINET DRAWINGS ARE FOR DESIGN INTENT ONLY. CABINET MAKER TO SUBMIT DETAILED SHOP DRAWINGS FOR REVIEW. BASIS OF DESIGN ARE SMART CABINETS
I. ALL VISIBLE SIDES OF CABINETS ARE TO RECEIVE A FINISHED PANEL THAT MATCHES THE CABINETS. THIS INCLUDES CABINETS THAT ARE UP AGAINST THE RADIATORS AND/OR FACING THE WINDOWS. TYP OF ALL.
J. ALL APPLIANCES IN THE APARTMENT UNITS WILL BE NEW ENERGY STAR APPLIANCES.
K. PROVIDE BLOCKING FOR FUTURE GRAB BARS IN ALL UNIT BATHROOMS.
L. ALL PANTRY AND LINEN CLOSETS TO RECEIVE FIVE (5) ADJUSTABLE MELAMINE SHELVES.
M. ALL CLOSETS TO RECEIVE ONE (1) MELAMINE SHELF AND COAT ROD. U.N.O.
N. EACH SHOWER TO BE PROVIDED W/ GLASS SHOWER DOOR.
O. PROVIDE AND INSTALL IN EACH APARTMENT (2) TOWEL BARS, (1) TOILET PAPER HOLDER, (1) ROBE HOOK.

LIGHTING LEGEND

FOR ALL LIGHTING CONTACT:
K2SA CONTROLS & LIGHTING
RICK KRUEGER
513.813.0633

1?	SURFACE TBD
2?	SURFACE TBD
SM3	SURFACE 6" ROUND
SM1	SURFACE 4" ROUND
SM10	DECORATIVE SURFACE MOUNTED ALLOWANCE: $300
V1	VANITY WALL LIGHT
SC1	VANITY SCONCE LIGHT
F1	36" CEILING FAN
F2	42" CEILING FAN
UC	UNDER CABINET LIGHT

APARTMENT ROOM FINISH SCHEDULE

ROOM NAME	FLOOR	BASE	WALLS NORTH	WALLS SOUTH	WALLS EAST	WALLS WEST	CEILING	REMARKS	REV. NO.
LIVING AREA	VP-1	RB-3	PT-1	PT-1	PT-1	PT-1	PT-3	NOTES: A	
KITCHEN	VP-1	RB-3	PT-1	PT-1	PT-1	PT-1	PT-3	NOTES: A	
CLOSET / LAUNDRY	VP-1	RB-3	PT-1	PT-1	PT-1	PT-1	PT-3	NOTES: A	
BEDROOM	VP-1	RB-3	PT-1	PT-1	PT-1	PT-1	PT-3	NOTES: A	
BATHROOM	CT-1	CTB-1	PT-1	PT-1	PT-1	PT-1	PT-3	NOTES: A	
FOYER / CORRIDOR	VP-1	RB-3	PT-1	PT-1	PT-1	PT-1	PT-3	NOTES: A	

NOTES:
A. ALL TRIM, CASINGS, DOORS, ETC ARE TO BE PAINTED. COLOR & SHEEN TBD.

APARTMENT DOOR SCHEDULE

DOOR MARK	DOOR LOCATION	DOOR INFORMATION SIZE WIDTH	HEIGHT	THICK	STYLE	DOOR MATERIAL	FRAME INFORMATION TYPE	FRAME MATERIAL	DETAIL HEAD	JAMB	OTHER	HDW. SET	FIRE RATING	REMARKS
D C/L (x1)	CLOSET / LAUNDRY	2'-6"	6'-8"	1 3/8"	2	OAK	A	WD	3/A600	4/A600		3	-	PRE-HUNG. STAINED OAK
D BTH (x1)	BATHROOM	2'-6"	6'-8"	1 3/8"	2	OAK	A	WD	3/A600	4/A600		2	-	PRE-HUNG. STAINED OAK
D C (x1)	CLOSET	(2) 2'-6"	6'-8"	1 3/8"	2	OAK	A	WD	3/A600	4/A600		3	-	PRE-HUNG. STAINED OAK

STATE OF OHIO JOSEPH A. BODKIN 3153567 REGISTERED ARCHITECT
Joseph A. Bodkin, License #3153567
Expiration Date: 12.31.2023

modelgroup
DEVELOPMENT • CONSTRUCTION • MANAGEMENT
1826 Race Street
Cincinnati, Ohio 45202
513.559.0048

Formica Building
Office/Apartments
Auditor Address: 115 E. 5th Street, Actual Address: 120 E. 4th Street
Cincinnati OH 45202

No.	Revisions	Date
1	APARTMENT CHANGE	12.05.2022

Project: Formica Building
115 E 5th Street
Cincinnati, Ohio 45202
Sheet Title: Unit Q
Construction
Issue Date
Project #: 2022_259
Drawn
Checked
Scale: As Noted

A317

APPROVED
CIN BD
2022P03573
02/01/23
city of CINCINNATI BUILDINGS & INSPECTIONS
C:\Users\jbodkin\Dropbox\01-NOVO_Projects\Co... From 1er1\03_Formica_A300 - Floors 3-10.dwg-317 - Q. Plot Date/Time: Dec 13, 2022-11:13am - By: jbodkin

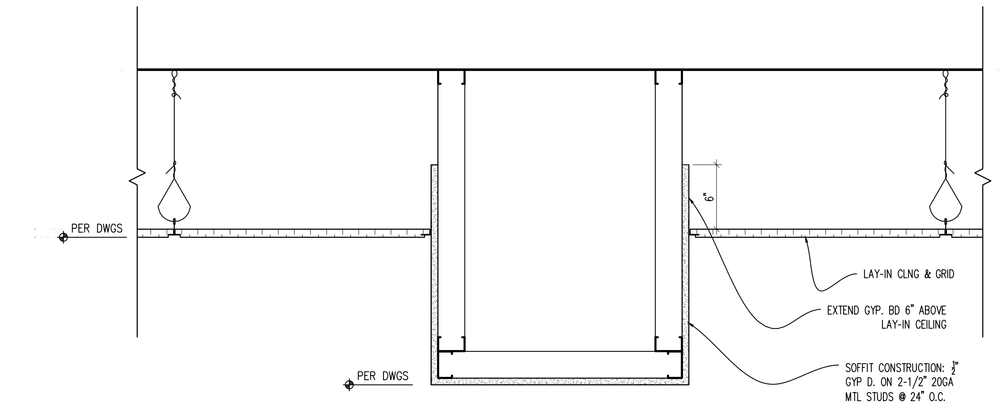

CORRIDOR GYP SOFFIT DETAIL, TYP
SECTION DETAIL
SCALE: 1-1/2" = 1'-0" (1 / A501)

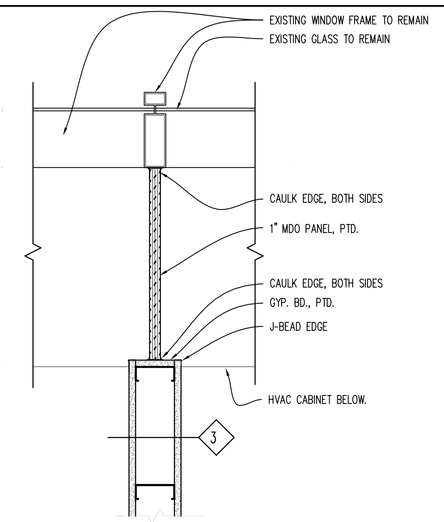

WINDOW MULLION DIVIDER DETAIL, TYP
PLAN DETAIL
SCALE: 1-1/2" = 1'-0" (2 / A501)

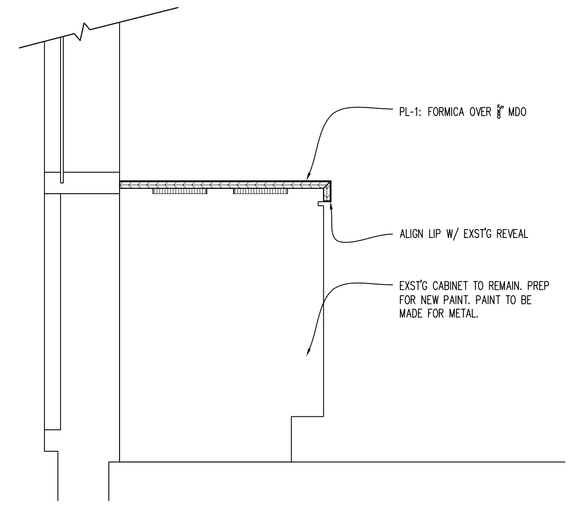

RADIATOR CAP COVER
DETAIL
SCALE: 1-1/2" = 1'-0" (3 / A501)

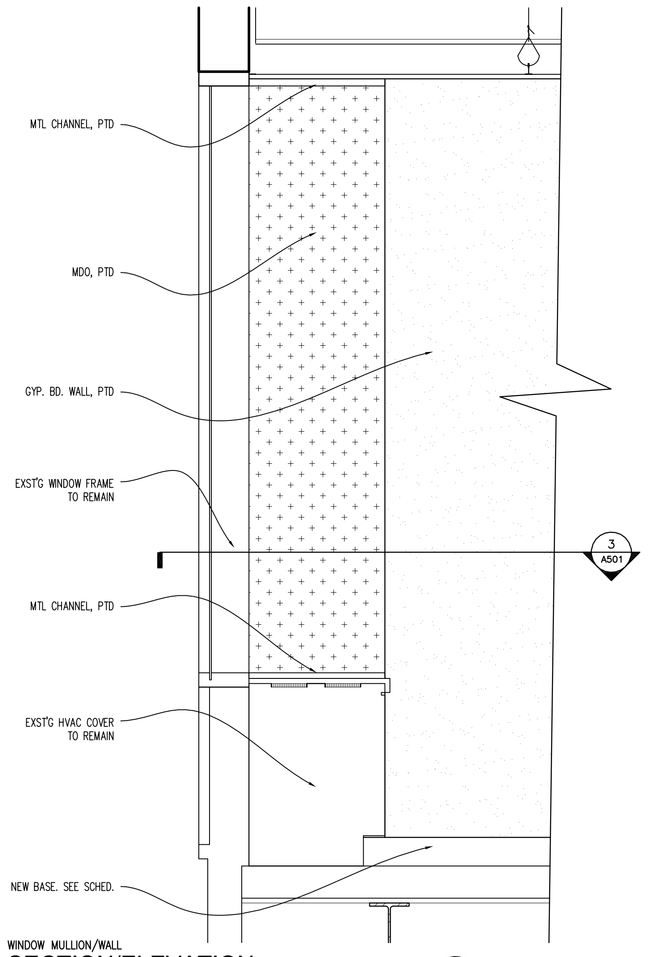

WINDOW MULLION/WALL
SECTION/ELEVATION
SCALE: 1" = 1'-0" (4 / A501)

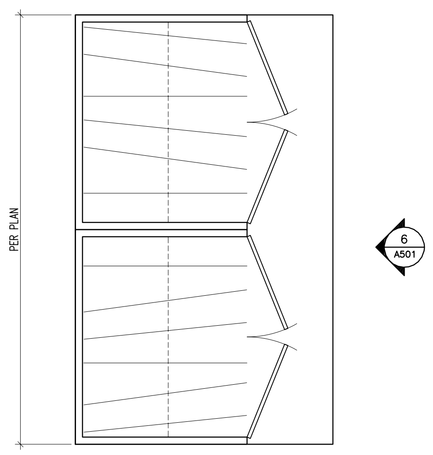

FOYER HUTCH
PLAN DETAIL
SCALE: 1" = 1'-0" (5 / A501)

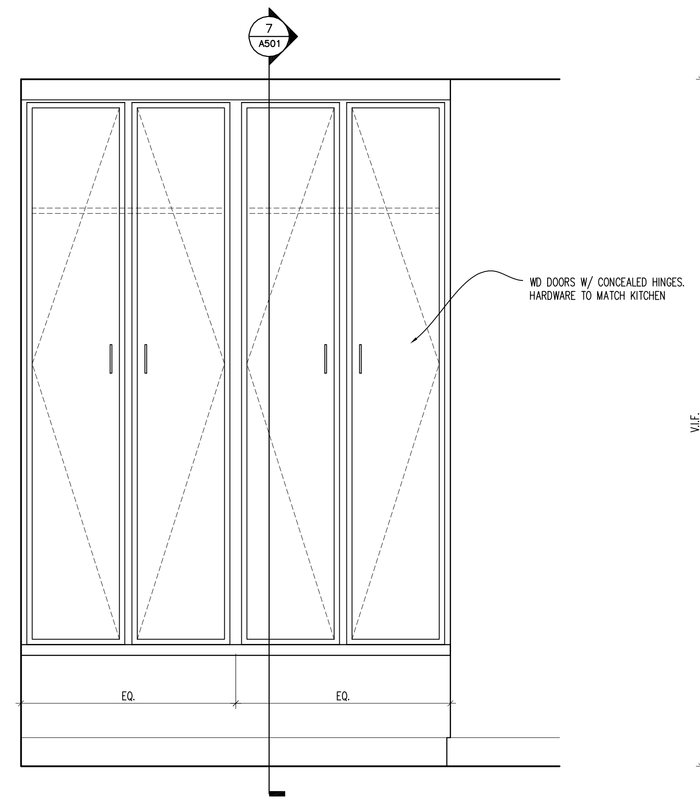

FOYER HUTCH
ELEVATION
SCALE: 1" = 1'-0" (6 / A501)

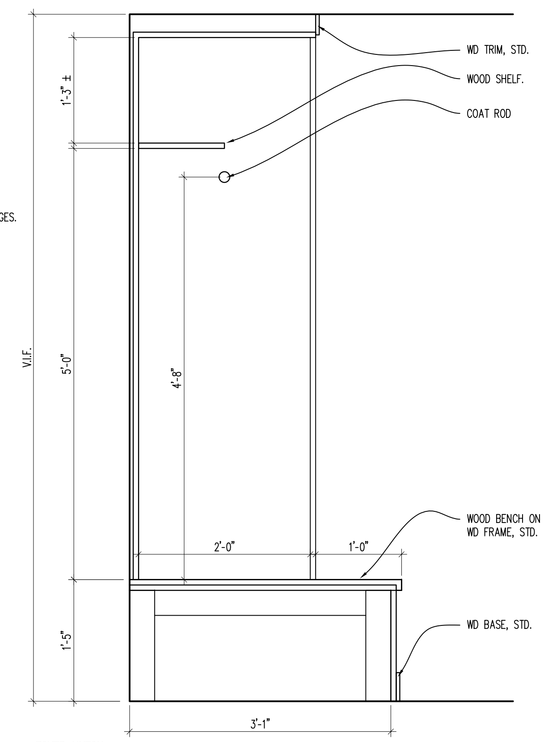

FOYER HUTCH
SECTION
SCALE: 1" = 1'-0" (7 / A501)

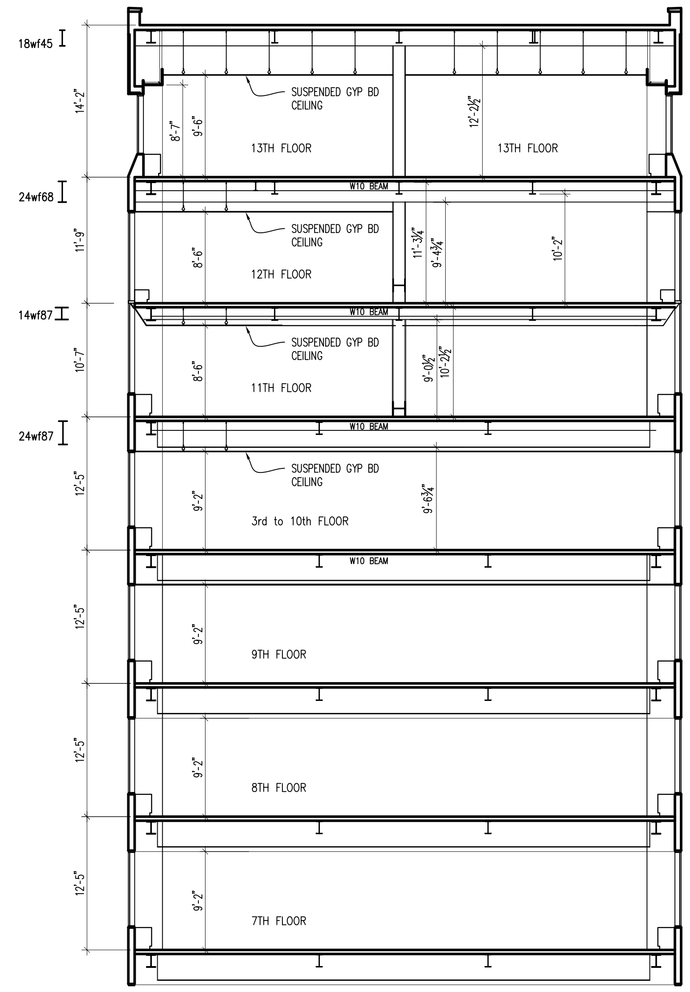

FOR REFERENCE ONLY – THRU COLUMN LINE "0"
BUILDING SECTION
SCALE: 1/8" = 1'-0" (8 / A501)

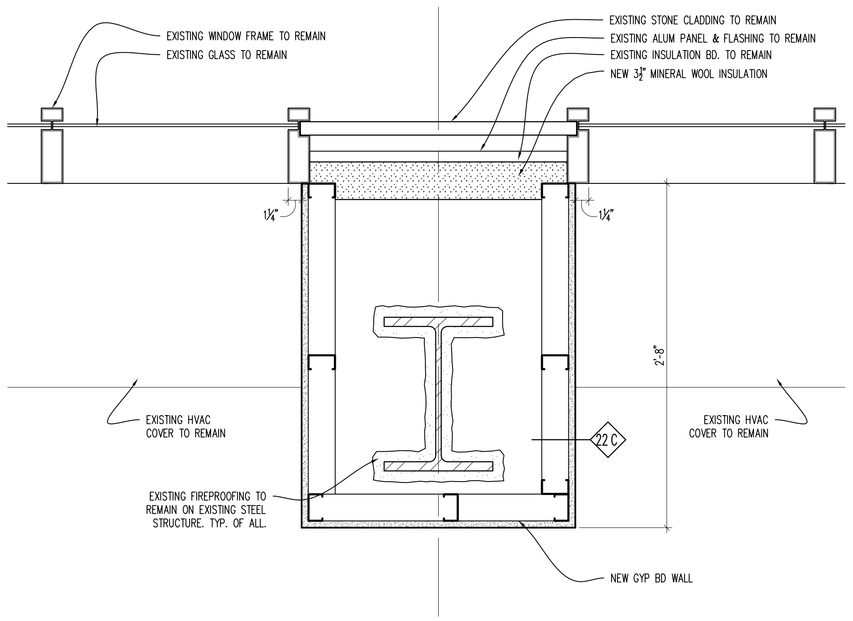

COLUMN WRAP – NON-RATED
PLAN DETAIL
SCALE: 1" = 1'-0" (9 / A501)

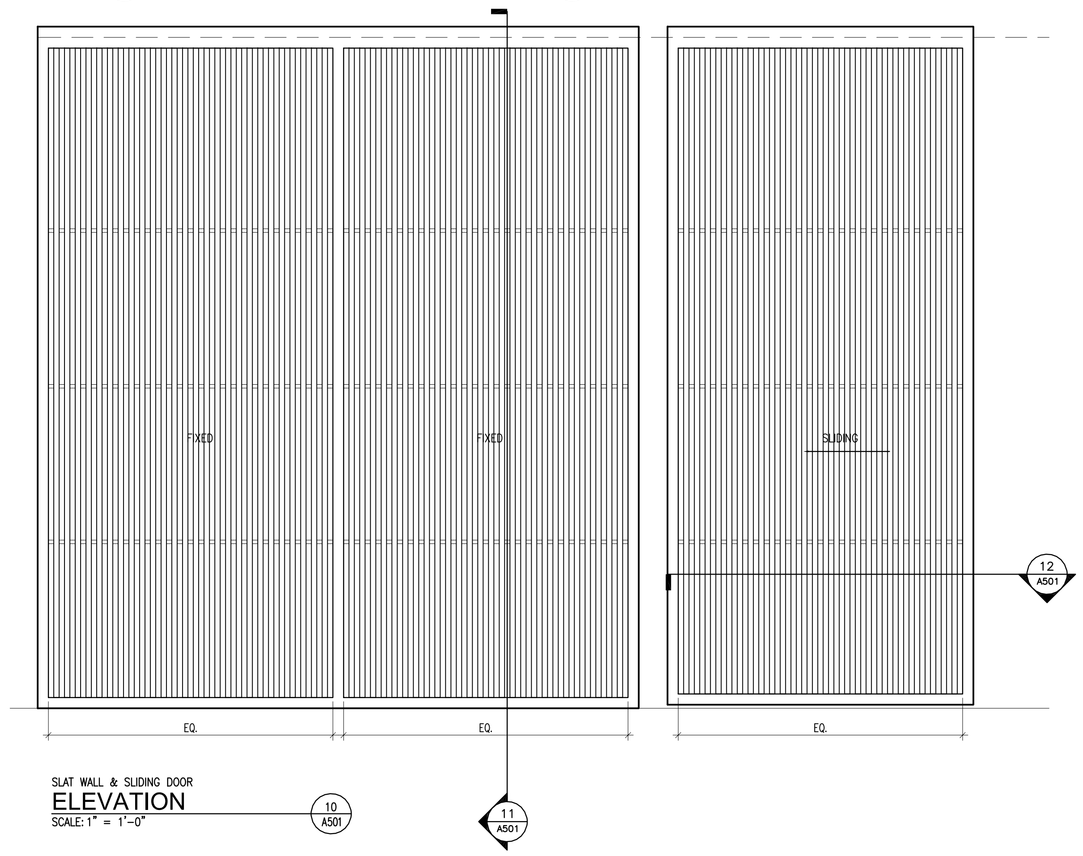

SLAT WALL & SLIDING DOOR
ELEVATION
SCALE: 1" = 1'-0" (10 / A501)

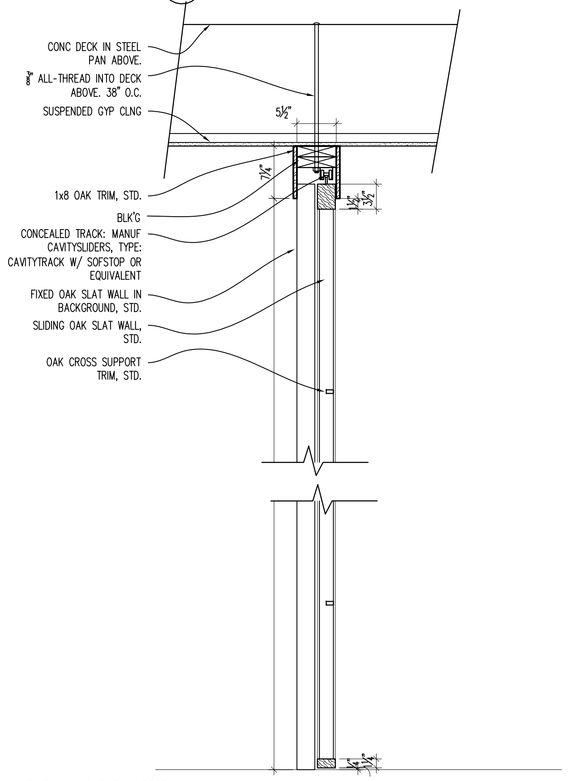

SLAT WALL & SLIDING DOOR
SECTION
SCALE: 1" = 1'-0" (11 / A501)

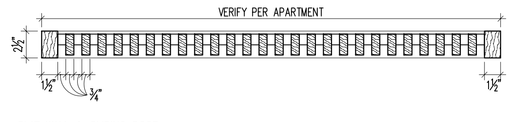

SLAT WALL & SLIDING DOOR
PLAN DETAIL
SCALE: 1" = 1'-0" (12 / A501)

STATE OF OHIO
JOSEPH A. BODKIN
3135567
REGISTERED ARCHITECT
Joseph A. Bodkin, License #3135567
Expiration Date: 12.31.2023

modelgroup
DEVELOPMENT • CONSTRUCTION • MANAGEMENT
1826 Race Street
Cincinnati, Ohio 45202
513.559.0048

Formica Building
Office/Apartments
Auditor Address: 115 E. 5th Street, Actual Address: 120 E. 4th Street
Cincinnati OH 45202

No.	Revisions	Date
1	ENG CHG #1	11.09.2022

Project: Formica Building
115 E 5th Street
Cincinnati, Ohio 45202
Sheet Title: WALL SECTIONS & DETAILS
Project No: 2022_259
Issue Date
Scale: As Noted
Drawn
Checked

A501

APPROVED
CIN BD
2022P03573
02/01/23
city of CINCINNATI BUILDINGS & INSPECTIONS
C:\Users\jbodkin\Dropbox\01_WORK_Projects\01_PHASE C\CADs - Phase C - From 1em1\05_Formica_A500.dwg-A501, Plot Date/Time: Nov 15, 2022-2:48pm - By: jbodkin

city of CINCINNATI BUILDINGS & INSPECTIONS
APPROVED
CIN BD
2022P03573
02/01/23

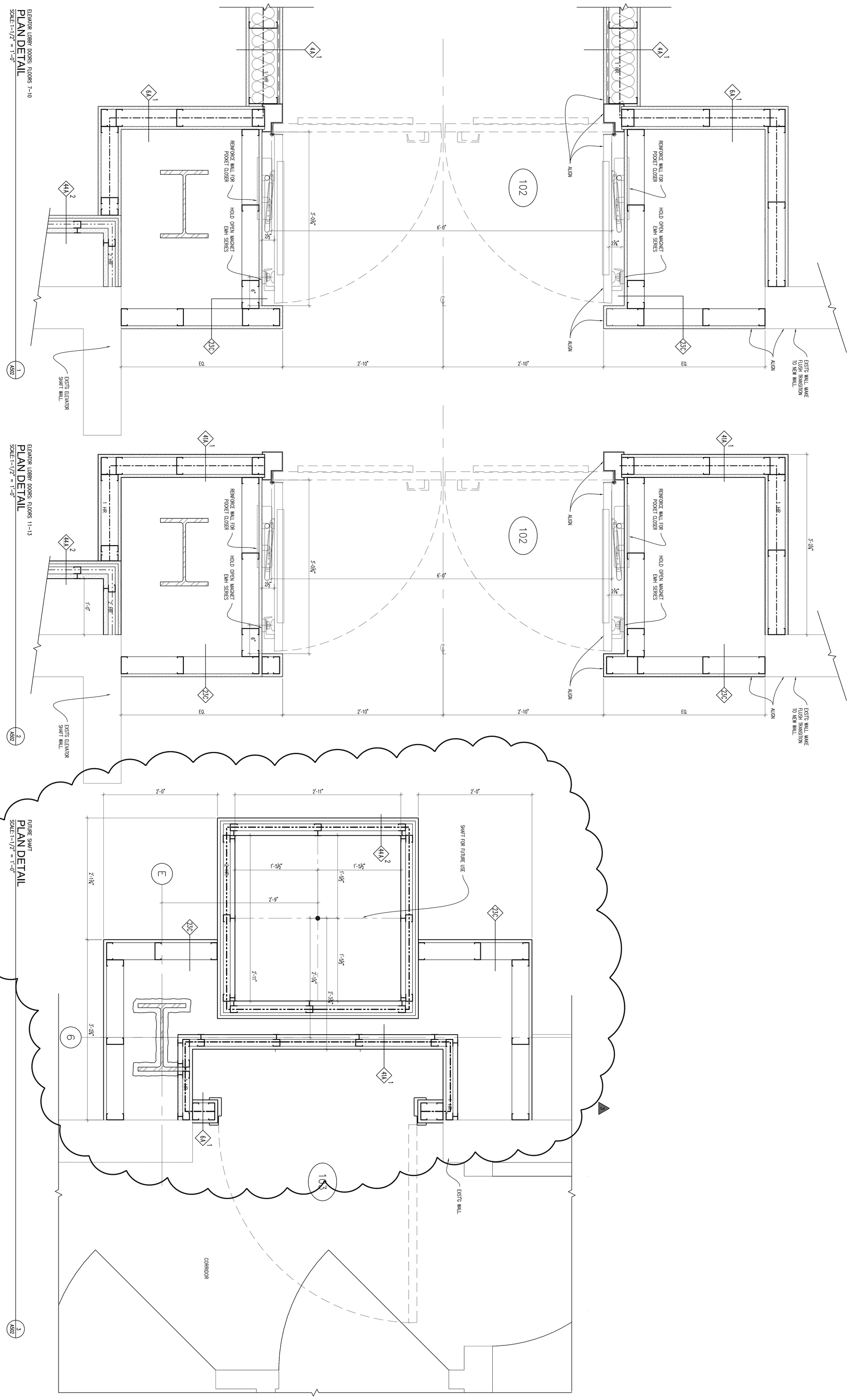

A502

Project
Formica Building
115 E 5th Street
Cincinnati, Ohio 45202

No.	Revisions	Date
2	ENG CHG #1	11.14.2022
3	PLAN EXAMINER COMMENTS	12.05.2022

Sheet Title
DETAILS

Project No. 2022_259 Issue Date
Scale As Noted Drawn Checked

Formica Building

Office/Apartments

Auditor Address: 115 E. 5th Street, Actual Address: 120 E. 4th Street
Cincinnati OH 45202

modelgroup
DEVELOPMENT • CONSTRUCTION • MANAGEMENT
1826 Race Street
Cincinnati, Ohio 45202
513.559.0048

STATE OF OHIO
JOSEPH A. BODKIN
313367
REGISTERED ARCHITECT
Joseph A. Bodkin, License #313367
Expiration Date: 12.31.2023

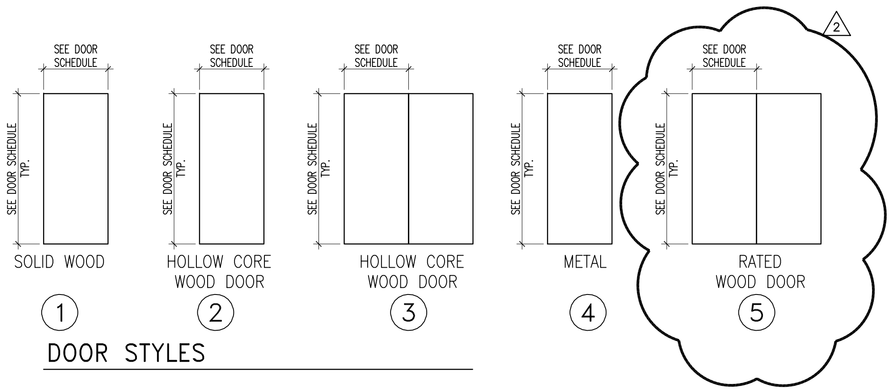

DOOR STYLES

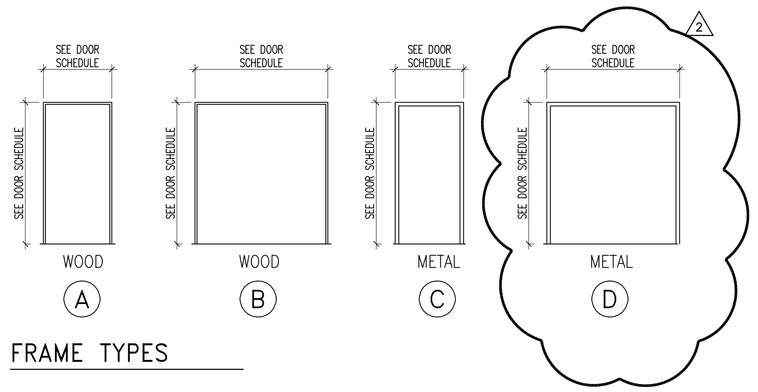

FRAME TYPES

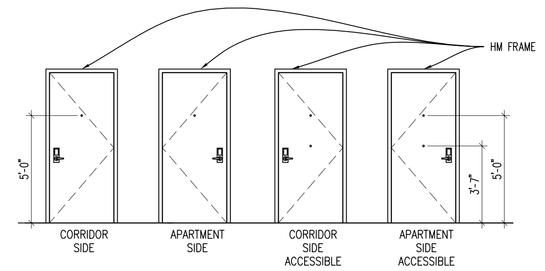

APARTMENT ENTRY DOOR DETAIL

GENERAL NOTES

A. IF A DOOR IS NOT DIMINISHED OR NOT CENTERED IN A ROOM, THE DOOR SHOULD BE MOUNTED SO THAT THE FACE OF THE FRAME IS 4" MINIMUM (IN STUD WALLS).

B. IF A DOOR IS GRAPHICALLY SHOWN GENERALLY CENTERED IN A ROOM OR SPACE, THE CENTER OF THE DOOR SHOULD BE AN EQUAL DISTANCE BETWEEN ADJOINING WALLS.

C. HM DOORS TO BE PAINTED TO MATCH ADJACENT WALLS, SEMI-GLOSS UNLESS OTHERWISE NOTED.

D. REFER TO APARTMENT PLANS FOR APARTMENT INTERIOR DOOR SCHEDULE.

E. ALL EXISTING HARDWARE TO BE REMAIN ON EXISTING HISTORIC DOORS.

F. ALL NEW DOOR HANDLES TO BE ADA COMPLIANT.

G. COORDINATE KEYING OF ALL DOORS WITH OWNER. THIS INCLUDES ALL KEY PADS, KEY FOBS, SECURED ACCESS POINTS, ETC.

H. ALL NEW AND EXISTING RATED DOORS ARE TO RECEIVE NEW CLOSERS.

I. EGRESS DOORS WILL BE READILY OPENABLE FROM THE EGRESS SIDE WITHOUT THE USE OF A KEY, SPECIAL KNOWLEDGE OR EFFORT.

DOOR SCHEDULE

DOOR MARK	DOOR INFORMATION					FRAME INFORMATION					HDW. SET	FIRE RATING	REMARKS
	SIZE			STYLE	DOOR MATERIAL	TYPE	FRAME MATERIAL	DETAIL					
	WIDTH	HEIGHT	THICK					HEAD	JAMB	OTHER			
EX	EX	EX	EX	EX	EX	EX	EX	EX	EX	EX	EX		REPAIR DOOR AS REQ'D, REPLACE ALL HARDWARE EXCEPT HINGES UNLESS THEY ARE DAMAGED. ALL HANDLES & CLOSERS TO BE ADA COMPLIANT.
100	3'-0"	7'-0"	1-3/4	1	WD	C	HM	5/A600	6/A600		01	20 MIN.	APARTMENT ENTRY
101	3'-0"	7'-0"	1-3/4	1	WD	C	HM	1/A600	2/A600	–	06	60 MIN.	RATED CORRIDOR
102	(2) 3'-0"	7'-0"	1-3/4	5	WD	D	HM	1/A600	2/A600	–	07	60 MIN.	EGRESS CORRIDOR: SYNTEGRA, XT-L SERIES x EMA SERIES HINGE, CONCEALED PUSH PAD ON MAGNETIC HOLD OPEN. OR EQUAL
103	3'-0"	7'-0"	1-3/4	1	WD	C	HM	1/A600	2/A600	–	08	60 MIN.	RATED CORRIDOR

DOOR HARDWARE SCHEDULE

ITEMS	HARDWARE SET 1	2	3	4	5	6	7	8
RATED HARDWARE	●					●	●	●
(3) HINGES	●	●	●		●	●		●
(6) HINGES				●			●	
ENTRANCE LOCKSET	●					●		
PRIVACY LOCKSET		●						
EXIT LOCKSET								
PASSAGE LOCKSET							●	
CLOSET LOCKSET			●	●				
STORAGE LOCKSET					●			●
OFFICE LOCKSET								
PULL, PUSH PLATE, KICK PLATE								
ELECTRIC STRIKE								
KEYLESS ENTRY (KEY FOB)								
ELECTRONIC KEY CARD DEADBOLT	●							
DEAD BOLT								
SPRING CLOSER	●							
CLOSER					●	●		●
PAIR CLOSER							●	
SMOKE SEAL	●				●	●	●	●
WIDE ANGLE VIEWER	●							
PAIR WALL / FLOOR STOP				●				
WALL / FLOOR STOP	●	●	●		●	●		●
MAGNETIC HOLD OPEN							●	
PANIC HARDWARE						●		
PANIC HARDWARE – CONCEALED							●	
THRESHOLD								
RUBBER THRESHOLD – LOW PROFILE	●							
WEATHER SEALS								
DOOR SWEEP	●							
DRIP								
	APARTMENT ENTRY	BED/BATH	CLOSET	DBL. CLOSET	JANITOR/MECHANICAL	EGRESS DOOR	ELEVATOR LOBBY DOOR	EGRESS DOOR

HARDWARE SCHEDULE NOTES:

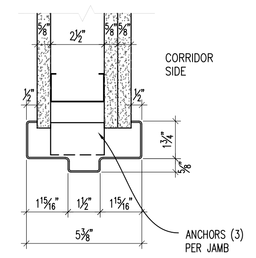

1 HEAD – WELDED FRAME
3" = 1'-0"

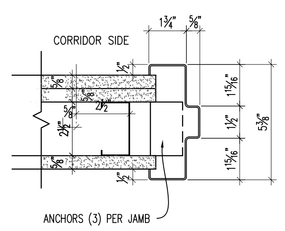

2 JAMB – WELDED FRAME
3" = 1'-0"

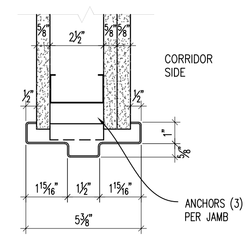

5 HEAD – WELDED FRAME
3" = 1'-0"

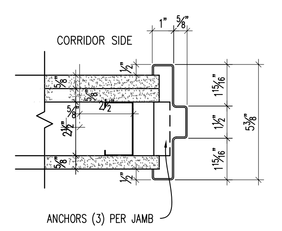

6 JAMB – WELDED FRAME
3" = 1'-0"

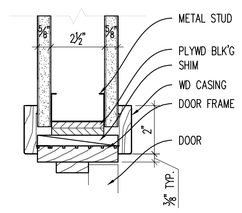

3 HEAD – WOOD FRAME
3" = 1'-0"

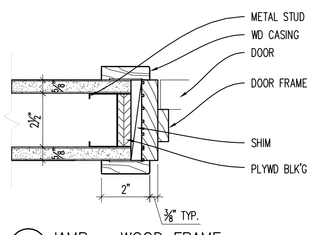

4 JAMB – WOOD FRAME
3" = 1'-0"

STATE OF OHIO JOSEPH A. BODKIN 3135567 REGISTERED ARCHITECT
Joseph A. Bodkin, License #3135567
Expiration Date: 12.31.2023

model group
DEVELOPMENT • CONSTRUCTION • MANAGEMENT
1826 Race Street
Cincinnati, Ohio 45202
513.559.0048

Formica Building

Office/Apartments

Auditor Address: 115 E. 5th Street, Actual Address: 120 E. 4th Street
Cincinnati OH 45202

Project: Formica Building
115 E 5th Street
Cincinnati, Ohio 45202

No.	Revisions	Date
1	PLAN REVIEW COMMENTS	07.05.2022
2	ENG. CHG. #1	11.14.2022

Sheet Title: SCHEDULE: DOOR

Project No. 2022_259 | Issue Date | Scale: As Noted | Drawn | Checked

A600

APPROVED
CIN BD
2022P03573
02/01/23
city of CINCINNATI BUILDINGS & INSPECTIONS
C:\Users\jbodkin\Dropbox\07_NKDG_Projects\06_Formica\From Ten1_PHASE C\CADs - Phase C - From Ten1\06_Formica_A600.dwg-A600, Plot Date/Time: Nov 17, 2022-10:01am - By: jbodkin

PARTITION CONFIGURATION:

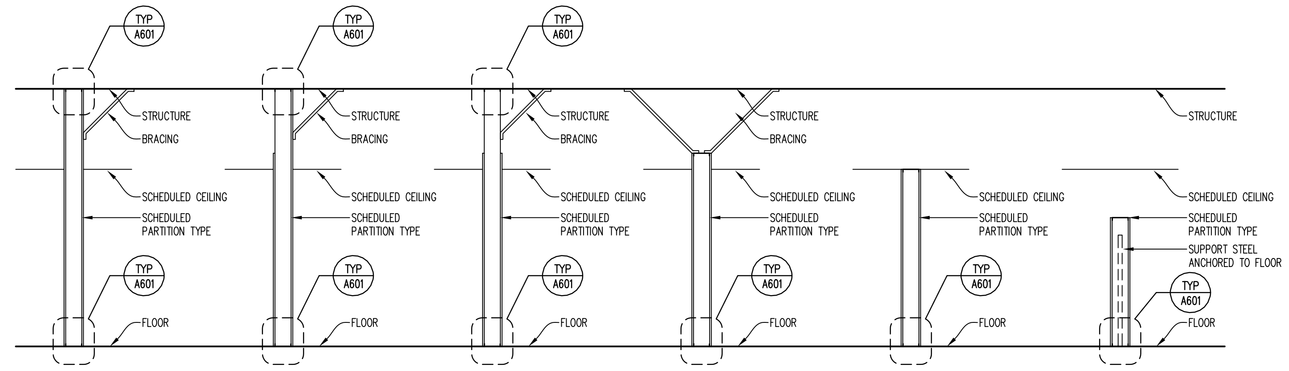

- A — PARTITION TO UNDERSIDE OF STRUCTURE
- B — STUD FRAMING TO UNDERSIDE OF STRUCTURE; ONE SIDE OF WALLBOARD TO 6" ABOVE CEILING, THE OTHER TO UNDERSIDE OF STRUCTURE
- C — STUD FRAMING TO UNDERSIDE OF STRUCTURE; WALLBOARD TO 6" ABOVE CEILING
- D — PARTITION TO 6" ABOVE CEILING
- E — PARTITION TO FINISHED FACE OF SCHEDULED CEILING
- F — PARTIAL HEIGHT PARTITION

PARTITION WALL MODIFICATIONS:

- PARTITION TYPE – NO MODIFICATION
- a — THERMAL INSULATION BATTS: PROVIDE AND INSTALL THERMAL INSULATION BATTS AT STUD PARTITIONS.
- b — ACOUSTIC INSULATION: PROVIDE AND INSTALL ACOUSTIC INSULATION, ACOUSTIC SEALANT AT HEAD AND SILL & ACOUSTIC SEALANT AROUND ALL PENETRATIONS.

GENERAL NOTES:

A. THE PARTITION TYPE DESIGNATION INCLUDES THE PARTITION TYPE, A FIRE RATING OR SMOKE PARTITION REQUIREMENT (WHERE APPLICABLE), A PARTITION CONFIGURATION, AND PARTITION WALL MODIFIERS (WHERE APPLICABLE).

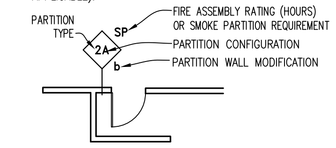

B. PARTITION TYPE INDICATORS ARE NOTED ON FLOOR PLANS. SEE LIFE SAFETY PLANS OR FLOOR PLANS FOR LOCATION AND EXTENT OR LIMITS OF FIRE AND SMOKE RATED PARTITIONS.

C. PARTITION TYPE NUMBERS ARE NOT SEQUENTIAL AND CERTAIN NUMBERS MAY NOT BE USED.

D. ALL PARTITION TYPE DETAILS ARE PLAN VIEW, UNLESS NOTED OTHERWISE.

TYPICAL END CONDITION DETAILS:

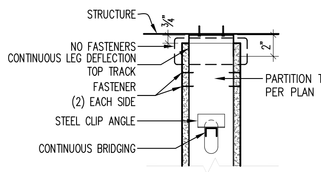

DEEP LEG DEFLECTING TOP TRACK – NON RATED
HEAD DETAIL 1 A601
SCALE: 1-1/2" =1'-0"

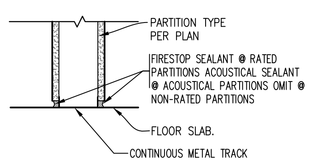

TYPICAL AT RATED AND ACOUSTICAL METAL STUD PARTITIONS
BASE DETAIL 2 A601
SCALE: 1-1/2" =1'-0"

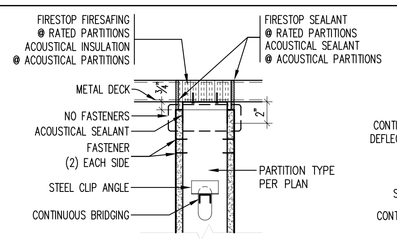

PARTITION PERPENDICULAR TO DECKING
RATED AND ACOUSTICAL METAL STUD PARTITIONS
HEAD DETAIL 3 A601
SCALE: 1-1/2" =1'-0"

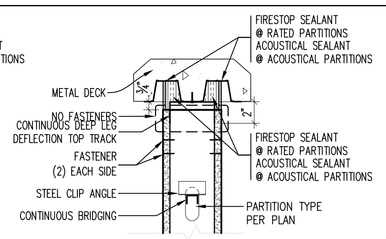

PARTITION PARALLEL TO DECKING
RATED AND ACOUSTICAL METAL STUD PARTITIONS
HEAD DETAIL 4 A601
SCALE: 1-1/2" =1'-0"

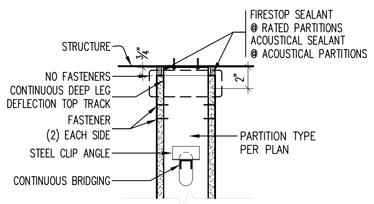

RATED AND ACOUSTICAL METAL STUD PARTITIONS
HEAD DETAIL 5 A601
SCALE: 1-1/2" =1'-0"

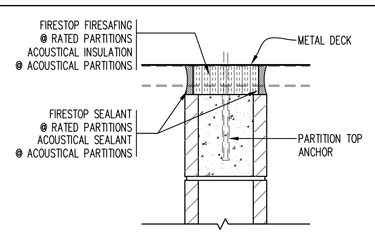

RATED AND NON-RATED CMU PARTITIONS
HEAD DETAIL 6 A601
SCALE: 1-1/2" =1'-0"

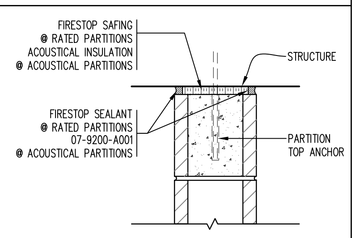

TYPICAL BASE OF HALF WALL PARTITION
BASE DETAIL 7 A601
SCALE: 1-1/2" =1'-0"

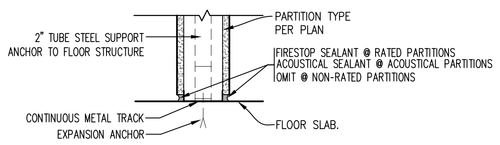

TYPICAL BASE OF HALF WALL PARTITION
BASE DETAIL 8 A601
SCALE: 1-1/2" =1'-0"

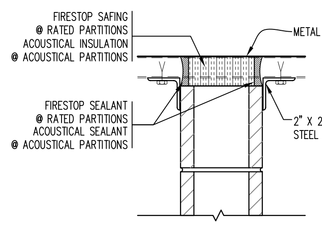

RATED AND NON-RATED CMU PARTITIONS
HEAD DETAIL 9 A601
SCALE: 1-1/2" =1'-0"

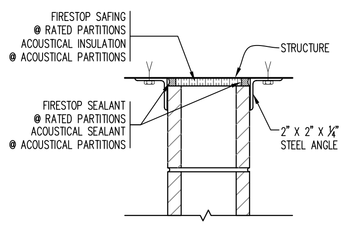

RATED AND NON-RATED CMU PARTITIONS
HEAD DETAIL 10 A601
SCALE: 1-1/2" =1'-0"

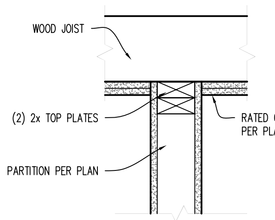

WOOD STUD WALL INTO RATED CEILING
HEAD DETAIL 11 A601
SCALE: 1-1/2" =1'-0"

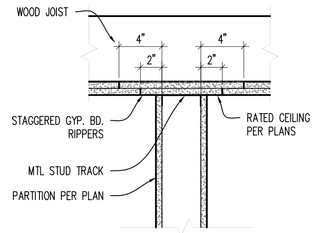

METAL STUD WALL INTO RATED CEILING
HEAD DETAIL 12 A601
SCALE: 1-1/2" =1'-0"

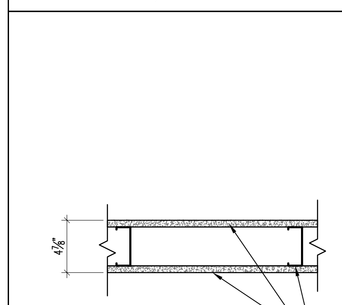

FIRE RESISTANCE: (IF INDICATED BY TAG ON PLANS) — 3

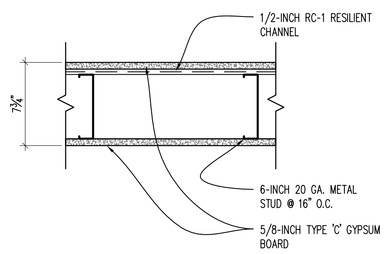

FIRE RESISTANCE: 1HR UL U419 (IF INDICATED BY TAG ON PLANS) — 4

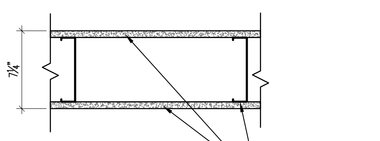

FIRE RESISTANCE: (IF INDICATED BY TAG ON PLANS) — 5

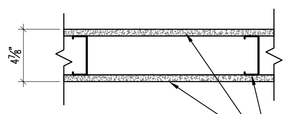

FIRE RESISTANCE: 1HR UL U404 (IF INDICATED BY TAG ON PLANS) — 6

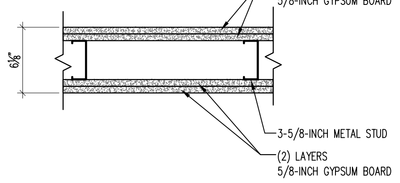

FIRE RESISTANCE: 2 HRS UL U419 (IF INDICATED BY TAG ON PLANS) — 8 (2)

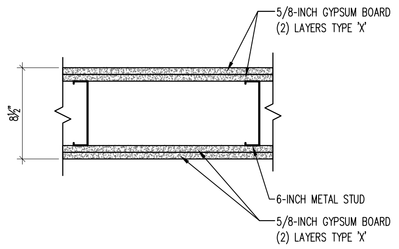

FIRE RESISTANCE: 2 HRS UL U419 (IF INDICATED BY TAG ON PLANS) — 10 (2)

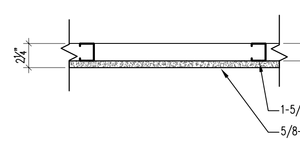

FIRE RESISTANCE: (IF INDICATED BY TAG ON PLANS) — 21

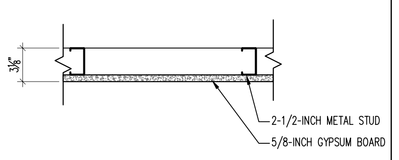

FIRE RESISTANCE: (IF INDICATED BY TAG ON PLANS) — 22

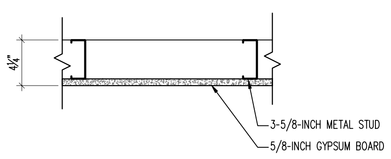

FIRE RESISTANCE: (IF INDICATED BY TAG ON PLANS) — 23

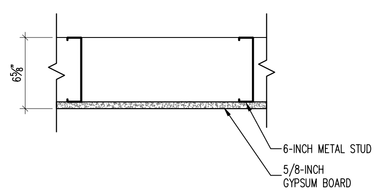

FIRE RESISTANCE: (IF INDICATED BY TAG ON PLANS) — 25

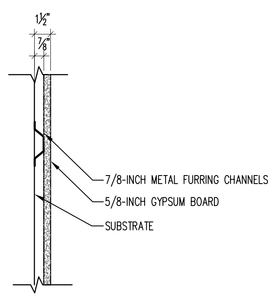

SECTION

FIRE RESISTANCE: (IF INDICATED BY TAG ON PLANS) — 31

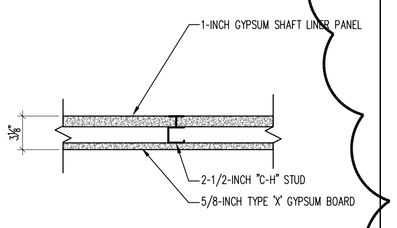

FIRE RESISTANCE: 1 HR UL U415-SYSTEM A (IF INDICATED BY TAG ON PLANS) — 41

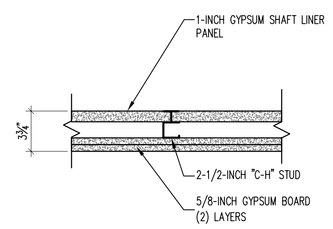

FIRE RESISTANCE: 2 HRS UL U415-SYSTEM B (IF INDICATED BY TAG ON PLANS) — 44 (2)

STATE OF OHIO JOSEPH A. BODKIN 513567 REGISTERED ARCHITECT
Joseph A. Bodkin, License #513567 Expiration Date: 12.31.2023

modelgroup
DEVELOPMENT • CONSTRUCTION • MANAGEMENT
1826 Race Street
Cincinnati, Ohio 45202
513.559.0048

Formica Building

Office/Apartments
Auditor Address: 115 E. 5th Street, Actual Address: 120 E. 4th Street
Cincinnati OH 45202

No.	Revisions	Date
2	ENG CHG #1	11.14.2022

Project: Formica Building
115 E 5th Street
Cincinnati, Ohio 45202
Sheet Title: PARTITIONS STYLES
Project No: 2022_259
Issue Date
Scale: As Noted
Drawn
Checked

A601

APPROVED CIN BD 2022P03573 02/01/23
city of CINCINNATI BUILDINGS & INSPECTIONS

C:\Users\jbodkin\Dropbox\01_NBDC_Projects\Formica Building\from 1ers1_PHASE C\CADs - Phase C - From 1ers1\06_Formica_A600.dwg-A601, Plot Date/Time: Nov 14, 2022-3:07pm - By: jbodkin

city of CINCINNATI BUILDINGS & INSPECTIONS
APPROVED
CIN BD
2022P03573
02/01/23

REFLECTED CEILING PLAN
TYPICAL OFFICE FLOOR PLAN - FLOORS 3RD - 6TH
SCALE: 1/8" = 1'-0"

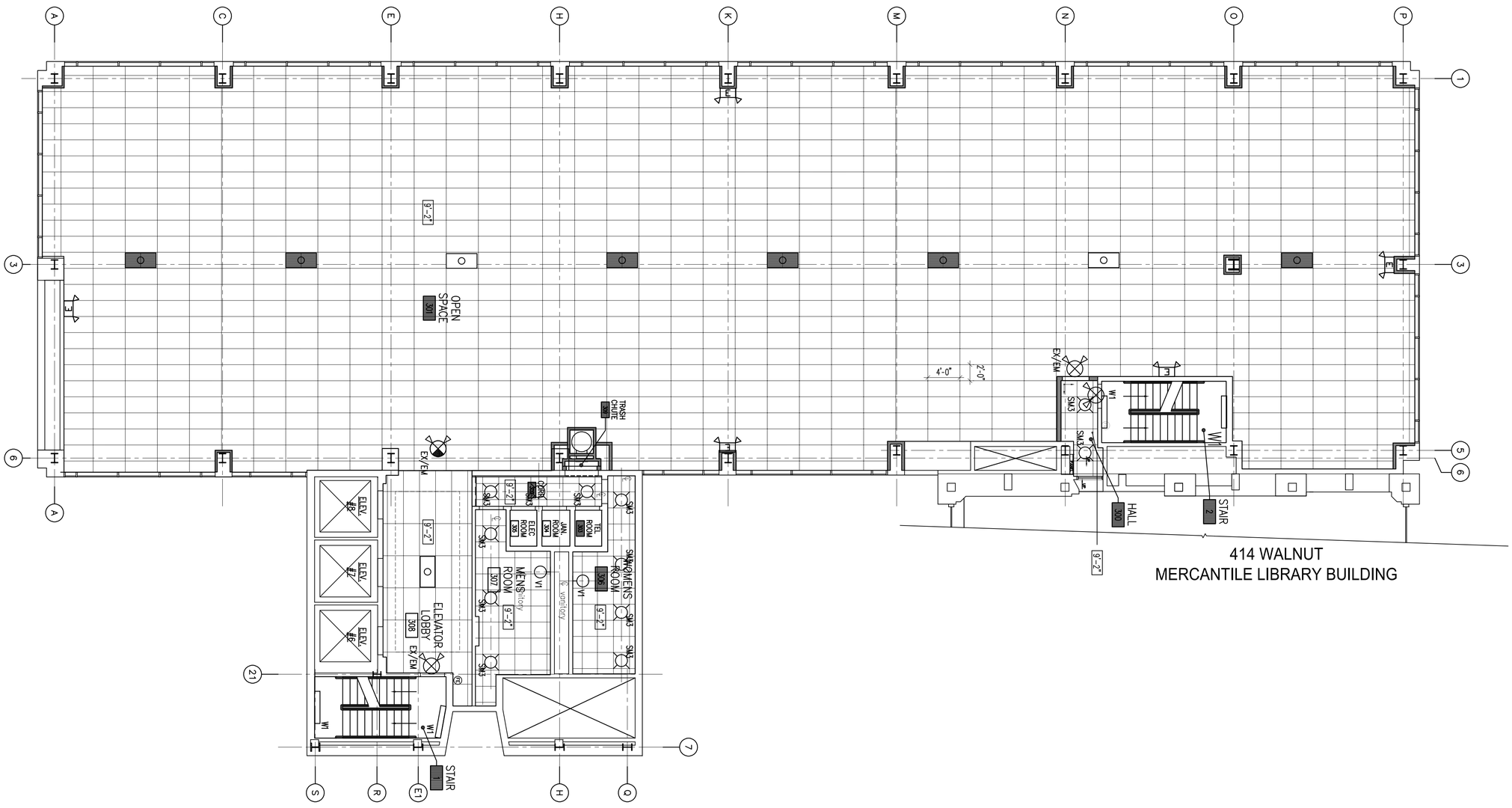

GENERAL CEILING NOTES:

A. ALL ELECTRIC TO BE DESIGN-BUILD UNDER SEPARATE PERMIT.
B. APARTMENT PLANS FOR CEILING INFORMATION.

CODED CEILING NOTES:

1. NEW ACOUSTIC TILE LAY-IN CEILING AND GRID. SEE FINISH SCHEDULE.
2. NO WORK IN THIS ROOM.
3. NEW GYP. BD. CEILING.
4. CEILING OPEN TO STRUCTURE ABOVE.
5. EXISTING ACT AND GRID TO REMAIN. REPLACE EXISTING LIGHTS WITH NEW LED FIXTURES.
6. NEW GYP. BD. SOFFIT., TYP.
7. REPLACE ALL LIGHTS IN MECHANICAL ROOMS WITH NEW LED FIXTURES.

CEILING LEGEND

FOR ALL LIGHTING CONTACT:
KZSA CONTROLS & LIGHTING
RICK KRUEGER
513.813.0633

?	SURFACE TBD
??	SURFACE TBD
SM3	SURFACE 6" ROUND
SM1	SURFACE 4" ROUND
R1	2X2 LED IN GRID
R2	2X4 LED IN GRID
SM10	DECORATIVE SURFACE MOUNTED
V1	VANITY LIGHT
W1	WALL / CEILING MOUNTED
EM	EMERGENCY LIGHTS
EX/EM	EXIT W/ EMERGENCY LIGHTS
EX	WALL MOUNTED EXIT
EX	EXIT DIRECTIONAL - CEILING MOUNTED
ST1	WALL / CEILING MOUNTED - 4'
ST2	WALL / CEILING MOUNTED - 2'

NOTE:
D/B ELECTRICAL IS TO PROVIDE APPROPRIATE WIRING AND CORRECT DIMMERS FOR ALL LIGHTS SCHEDULE TO BE ON DIMMERS

A703

Project: Formica Building
120 E 4th Street
Cincinnati, Ohio 45202

No.	Revisions	Date
2	ENG. CHG. #1	11.14.2022

Sheet Title: TYPICAL OFFICE FLOOR REFLECTED CEILING PLAN
Project No. 2022_259 Issue Date
Scale As Noted Drawn Checked

Formica Building
Office/Apartments
Auditor Address: 115 E. 5th Street, Actual Address: 120 E. 4th Street
Cincinnati OH 45202

modelgroup
DEVELOPMENT • CONSTRUCTION • MANAGEMENT
1826 Race Street
Cincinnati, Ohio 45202
513.559.0048

STATE OF OHIO JOSEPH A. BODKIN 313367 REGISTERED ARCHITECT
Joseph A. Bodkin, License #313367
Expiration Date: 12.31.2023

city of CINCINNATI BUILDINGS & INSPECTIONS
APPROVED
CIN BD
2022P03573
02/01/23

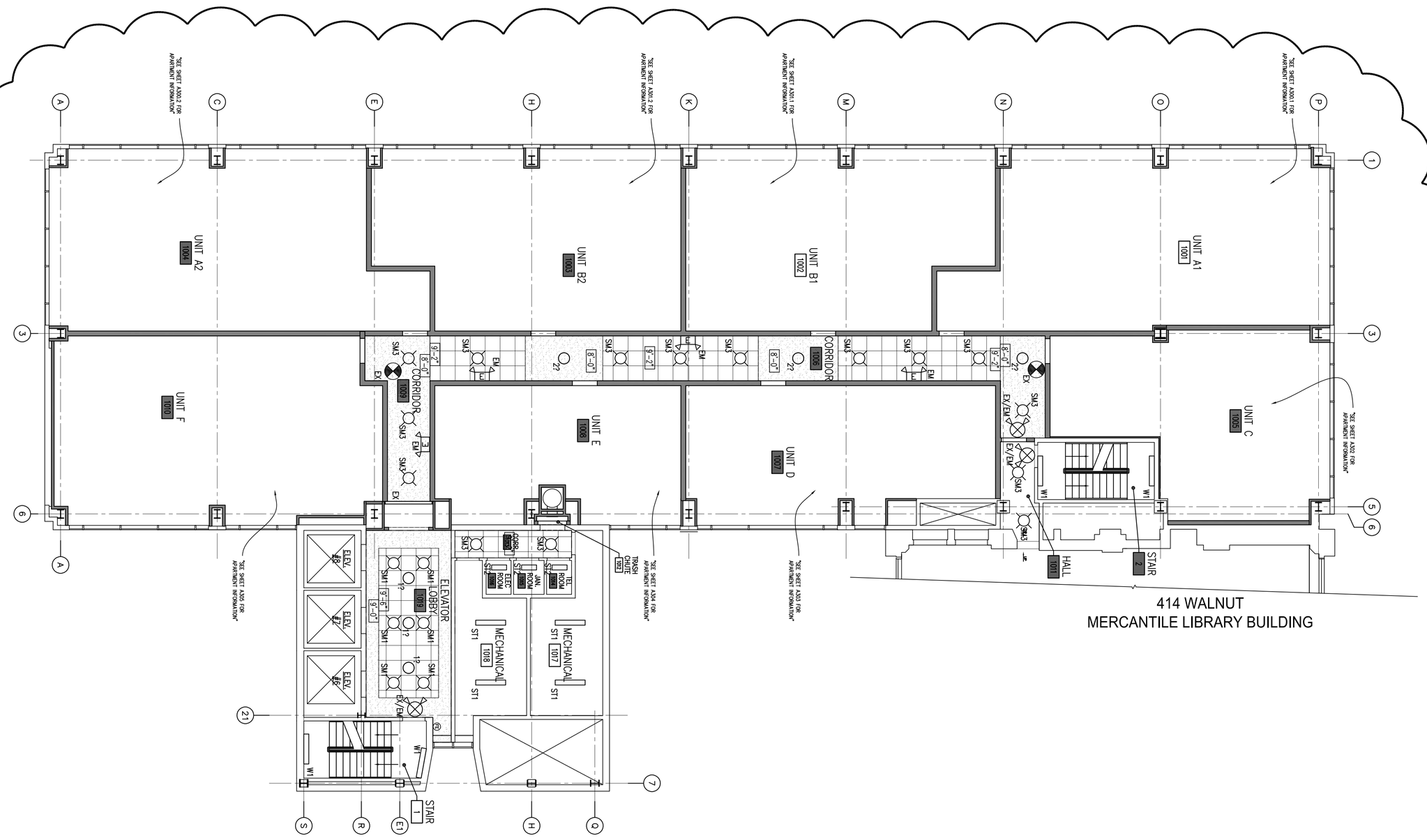

REFLECTED CEILING PLAN
TYPICAL RESIDENTIAL FLOOR PLAN - FLOORS 7TH, 8TH, 9TH & 10TH
SCALE: 1/8" = 1'-0"

1 A704

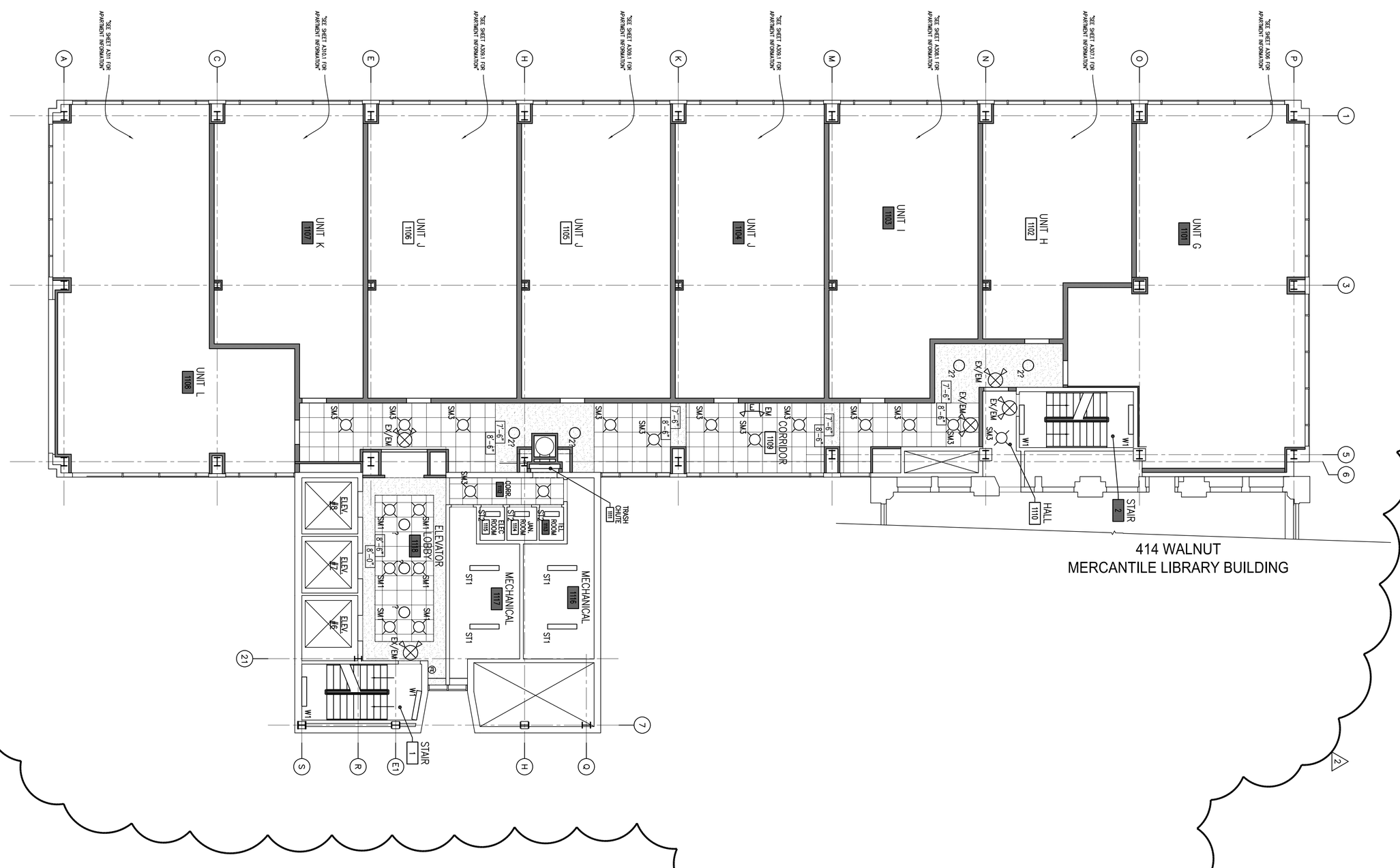

REFLECTED CEILING PLAN
RESIDENTIAL FLOOR PLAN - FLOOR 11TH
SCALE: 1/8" = 1'-0"

2 A704

GENERAL CEILING NOTES:

A. ALL ELECTRIC TO BE DESIGN-BUILD UNDER SEPARATE PERMIT.
B. APARTMENT PLANS FOR CEILING INFORMATION.

CODED CEILING NOTES:

1. NEW ACOUSTIC TILE LAY-IN CEILING AND GRID. SEE FINISH SCHEDULE.
2. NO WORK IN THIS ROOM.
3. NEW GYP. BD. CEILING.
4. CEILING OPEN TO STRUCTURE ABOVE.
5. EXISTING ACT AND GRID TO REMAIN. REPLACE EXISTING LIGHTS WITH NEW LED FIXTURES.
6. NEW GYP. BD. SOFFIT., TYP.
7. REPLACE ALL LIGHTS IN MECHANICAL ROOMS WITH NEW LED FIXTURES.

CEILING LEGEND

FOR ALL LIGHTING CONTACT:
KZSA CONTROLS & LIGHTING
Rhonda Kaufman
513.871.7633

?	SURFACE TBD
22	SURFACE TBD
SM3	SURFACE 6" ROUND
SM1	SURFACE 4" ROUND
R1	2X2 LED IN GRID
R2	2X4 LED IN GRID
SM10	DECORATIVE SURFACE MOUNTED
V1	VANITY LIGHT
W1	WALL / CEILING MOUNTED
EM	EMERGENCY LIGHTS
EX/EM	EXIT W/ EMERGENCY LIGHTS
EX	WALL MOUNTED EXIT
EX	EXIT DIRECTIONAL - CEILING MOUNTED
ST1	WALL / CEILING MOUNTED - 4'
ST2	WALL / CEILING MOUNTED - 2'

NOTE:
D/B ELECTRICAL IS TO PROVIDE APPROPRIATE WIRING AND CORRECT DIMMERS FOR ALL LIGHTS SCHEDULE TO BE ON DIMMERS

A704

Project
Formica Building
120 E 4th Street
Cincinnati, Ohio 45202

No.	Revisions	Date
2	ENG CHG #1	11.11.2022

Sheet Title
RESIDENTIAL FLOORS REFLECTED CEILING PLANS
Construction

Project No. 2022_259 Issue Date
Scale As Noted Drawn Checked

Formica Building
Office/Apartments
Auditor Address: 115 E. 5th Street, Actual Address: 120 E. 4th Street
Cincinnati OH 45202

modelgroup
DEVELOPMENT • CONSTRUCTION • MANAGEMENT
1826 Race Street
Cincinnati, Ohio 45202
513.559.0048

STATE OF OHIO
JOSEPH A. BODKIN
313367
REGISTERED ARCHITECT
Joseph A. Bodkin, License #313367
Expiration Date: 12.31.2023

city of CINCINNATI BUILDINGS & INSPECTIONS
APPROVED
CIN BD
2022P03573
02/01/23

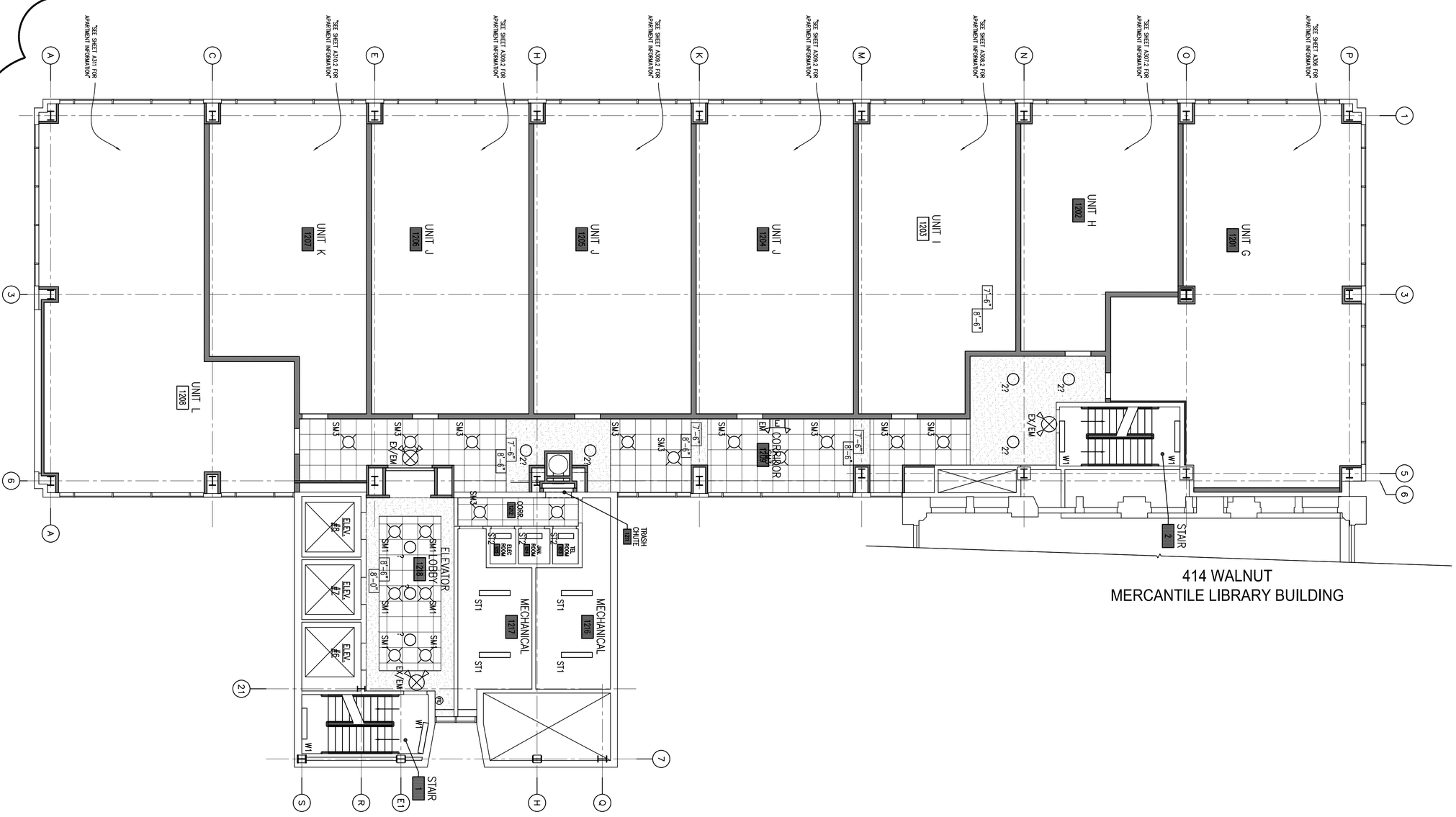

REFLECTED CEILING PLAN
TYPICAL RESIDENTIAL FLOOR PLAN - FLOOR 12
SCALE: 1/8" = 1'-0"

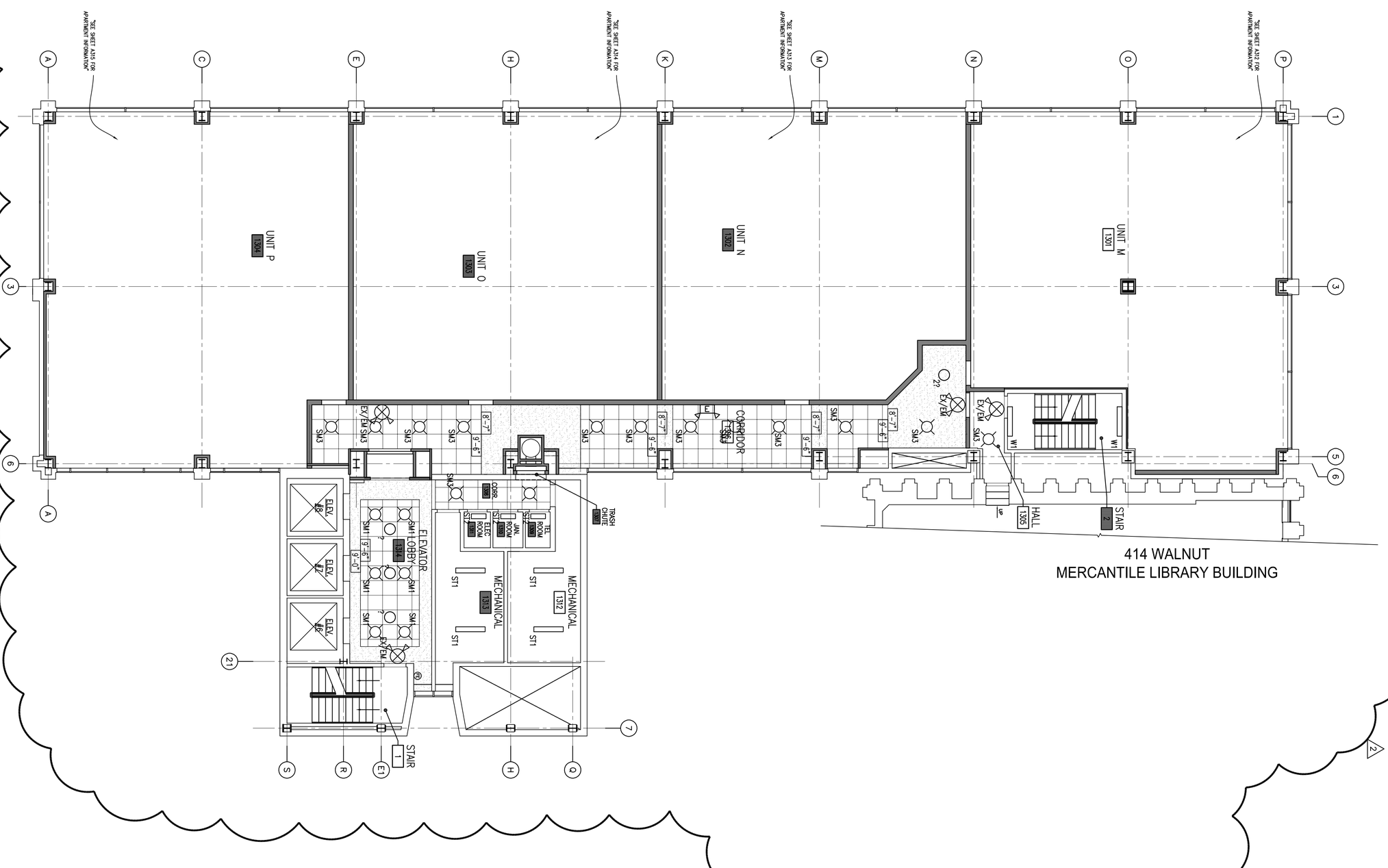

REFLECTED CEILING PLAN
RESIDENTIAL FLOOR PLAN - FLOOR 13TH
SCALE: 1/8" = 1'-0"

GENERAL CEILING NOTES:

A. ALL ELECTRIC TO BE DESIGN-BUILD UNDER SEPARATE PERMIT.
B. APARTMENT PLANS FOR CEILING INFORMATION.

CODED CEILING NOTES:

1. NEW ACOUSTIC TILE LAY-IN CEILING AND GRID. SEE FINISH SCHEDULE.
2. NO WORK IN THIS ROOM.
3. NEW GYP. BD. CEILING.
4. CEILING OPEN TO STRUCTURE ABOVE.
5. EXISTING ACT AND GRID TO REMAIN. REPLACE EXISTING LIGHTS WITH NEW LED FIXTURES.
6. NEW GYP. BD. SOFFIT., TYP.
7. REPLACE ALL LIGHTS IN MECHANICAL ROOMS WITH NEW LED FIXTURES.

CEILING LEGEND

FOR ALL LIGHTING & CONTACT
ROSA CONTROLS & LIGHTING
BICK KRUEGER
513.813.0633

- ?1 SURFACE TBD
- ?2,3 SURFACE TBD
- SM3 SURFACE 6" ROUND
- SM1 SURFACE 4" ROUND
- R1 2X2 LED IN GRID
- R2 2X4 LED IN GRID
- SM10 DECORATIVE SURFACE MOUNTED
- V1 VANITY LIGHT
- W1 WALL / CEILING MOUNTED
- E EM EMERGENCY LIGHTS
- EX/EM EXIT W/ EMERGENCY LIGHTS
- EX WALL MOUNTED EXIT
- EX EXIT DIRECTIONAL - CEILING MOUNTED
- ST1 WALL / CEILING MOUNTED - 4'
- ST2 WALL / CEILING MOUNTED - 2'

NOTE: D/B ELECTRICAL IS TO PROVIDE APPROPRIATE WIRING AND CORRECT DIMMERS FOR ALL LIGHTS SCHEDULE TO BE ON DIMMERS

A705

Project: Formica Building
120 E 4th Street
Cincinnati, Ohio 45202

No.	Revisions	Date
2	ENG CHG #1	11.11.2022

Sheet Title: RESIDENTIAL FLOORS REFLECTED CEILING PLANS
Construction
Project No. 2022_259 Issue Date
Scale As Noted Drawn Checked

Formica Building

Office/Apartments

Auditor Address: 115 E. 5th Street, Actual Address: 120 E. 4th Street
Cincinnati OH 45202

modelgroup
DEVELOPMENT • CONSTRUCTION • MANAGEMENT
1826 Race Street
Cincinnati, Ohio 45202
513.559.0048

STATE OF OHIO JOSEPH A. BODKIN 313367 REGISTERED ARCHITECT
Joseph A. Bodkin, License #313367
Expiration Date: 12.31.2023

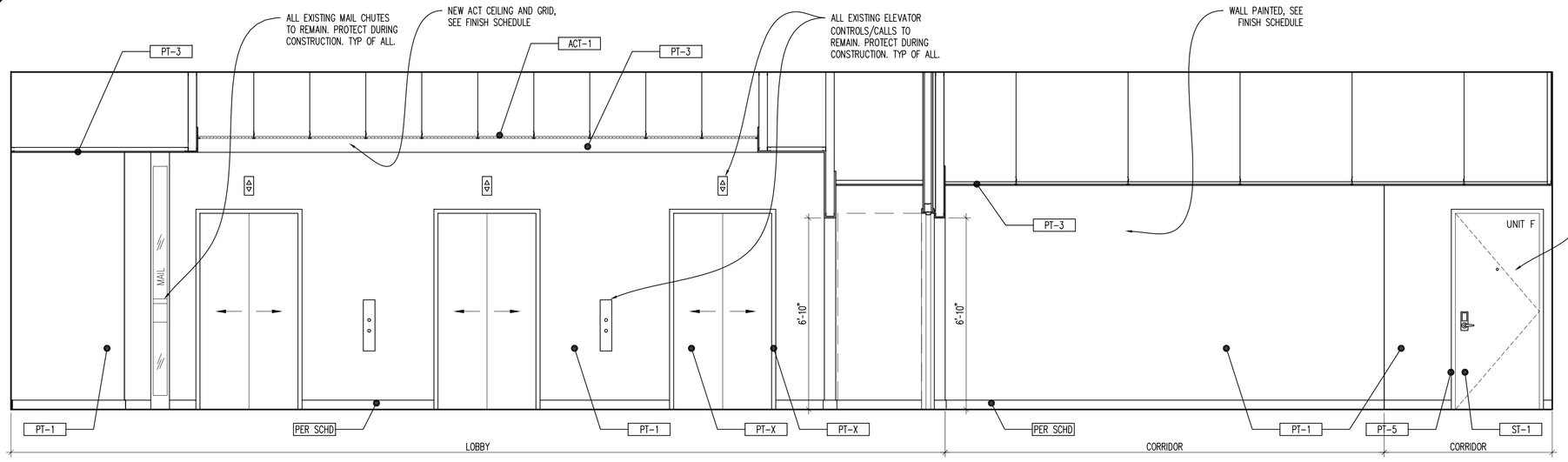

TYPICAL LOBBY – 7TH TO 10TH FLOOR
ELEVATION
SCALE: 3/8" = 1'-0"
1 A800

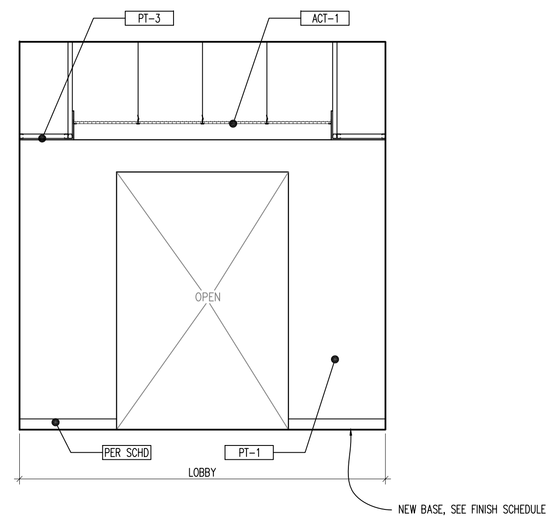

TYPICAL LOBBY – 7TH TO 10TH FLOOR
ELEVATION
SCALE: 3/8" = 1'-0"
2 A800

GENERAL ELEVATION NOTES:

A. SEE FINISH SCHEDULE FOR ALL FINISHES.
B. ALL ELEVATOR CALL BUTTONS AND SIGNALS ARE TO REMAIN. PROTECT DURING CONSTRUCTION.
C. ALL MAIL CHUTES ARE TO REMAIN. PROTECT DURING CONSTRUCTION.
D. ALL EXISTING RADIATOR CABINETS ARE TO REMAIN. PROTECT DURING CONSTRUCTION. CLEAN, PREP, PRIME & PAINT METAL. ADD NEW P-LAM COVER: SEE DETAIL.
E. ALL EXISTING WINDOW FRAMES AND GLASS ARE TO REMAIN. PROTECT DURING CONSTRUCTION.

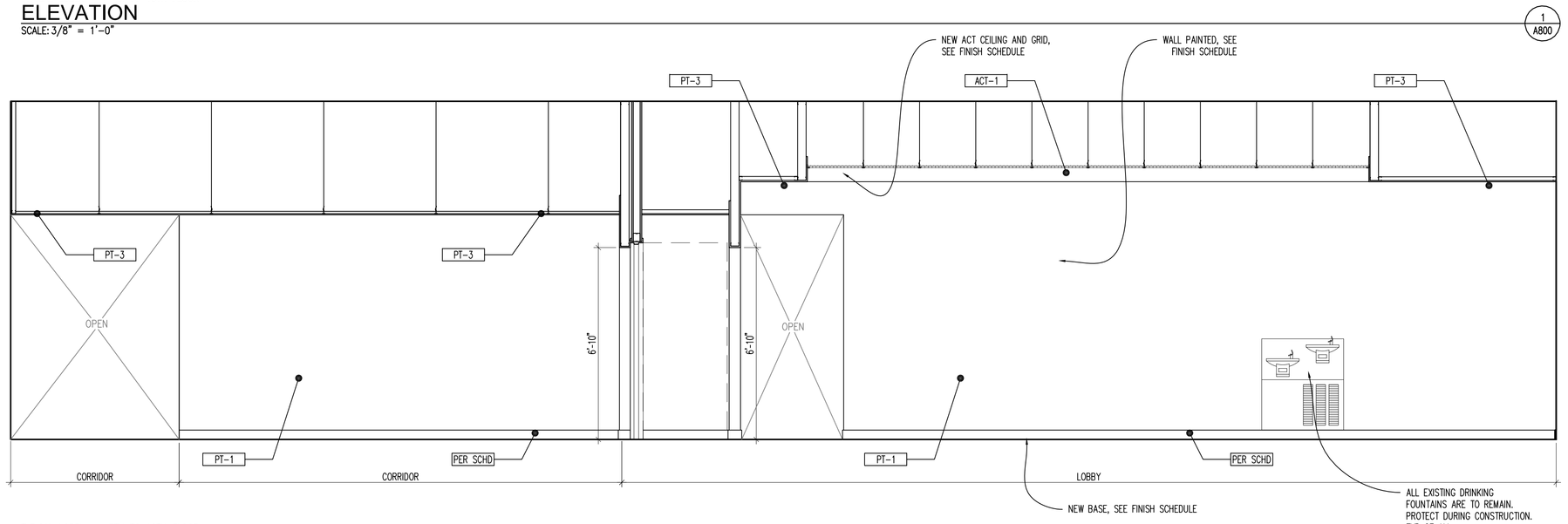

TYPICAL LOBBY – 7TH TO 10TH FLOOR
ELEVATION
SCALE: 3/8" = 1'-0"
3 A800

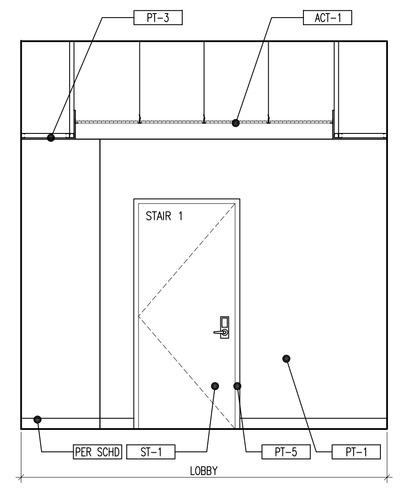

TYPICAL LOBBY – 7TH TO 10TH FLOOR
ELEVATION
SCALE: 3/8" = 1'-0"
4 A800

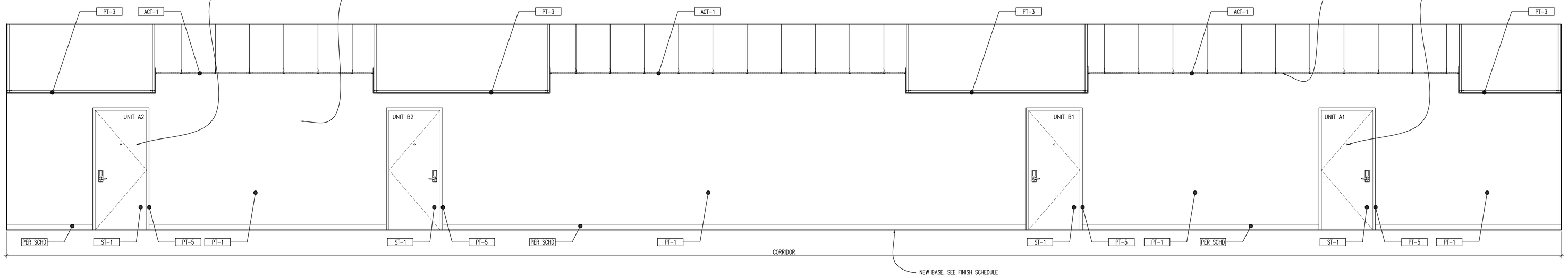

TYPICAL CORRIDOR – 7TH TO 10TH FLOOR
ELEVATION
SCALE: 3/8" = 1'-0"
5 A800

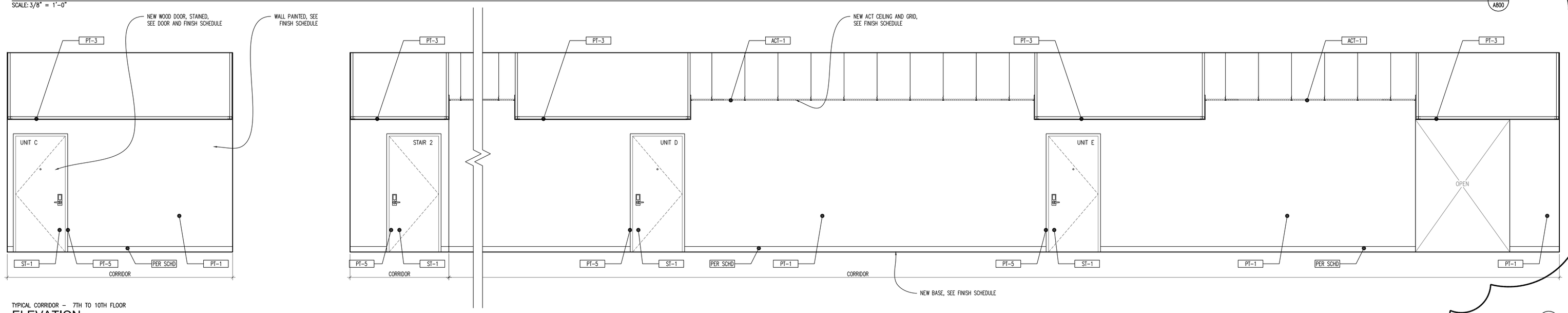

TYPICAL CORRIDOR – 7TH TO 10TH FLOOR
ELEVATION
SCALE: 3/8" = 1'-0"
6 A800

STATE OF OHIO
JOSEPH A. BODKIN
3135567
REGISTERED ARCHITECT
Joseph A. Bodkin, License #3135567
Expiration Date: 12.31.2023

modelgroup
DEVELOPMENT • CONSTRUCTION • MANAGEMENT
1826 Race Street
Cincinnati, Ohio 45202
513.559.0048

Formica Building
Office/Apartments
Auditor Address: 115 E. 5th Street, Actual Address: 120 E. 4th Street
Cincinnati OH 45202

No.	Revisions	Date
2	ENG CHG #1	11.14.2022

Project: Formica Building
115. E 5th Street
Cincinnati, Ohio 45202
Sheet Title: INTERIOR ELEVATIONS – Common Apartment Hallways
Construction
Project No: 2022_259
Issue Date
Scale: As Noted
Drawn
Checked

A800

APPROVED
CIN BD
2022P03573
02/01/23

city of CINCINNATI
BUILDINGS & INSPECTIONS

O:\Users\jbodkin\Dropbox\01_MBG_Projects\01_Formica\Revit\V18_Formica_A800.dwg - A800, Plot Date/Time: Nov 14, 2022 - 3:50pm - By: jbodkin

city of CINCINNATI BUILDINGS & INSPECTIONS
APPROVED
CIN BD
2022P03573
02/01/23

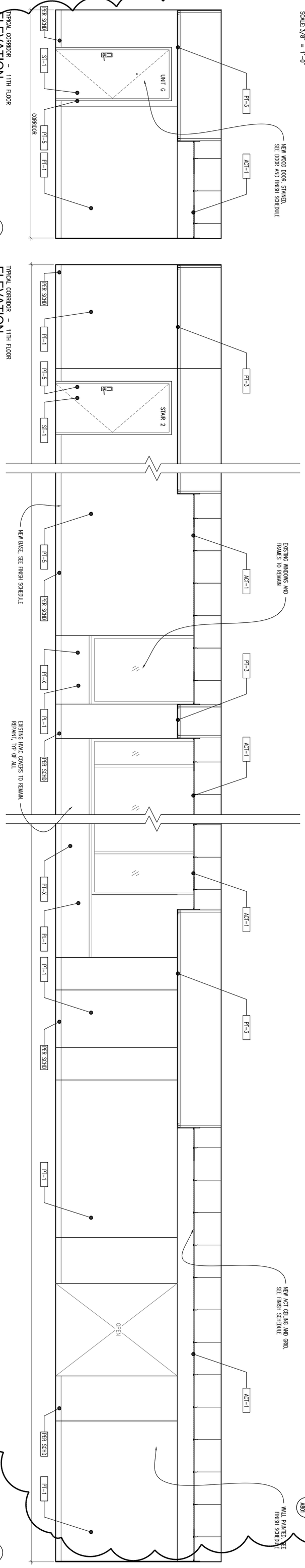

TYPICAL CORRIDOR - 11TH FLOOR
ELEVATION
SCALE: 3/8" = 1'-0"

TYPICAL CORRIDOR - 11TH FLOOR
ELEVATION
SCALE: 3/8" = 1'-0"

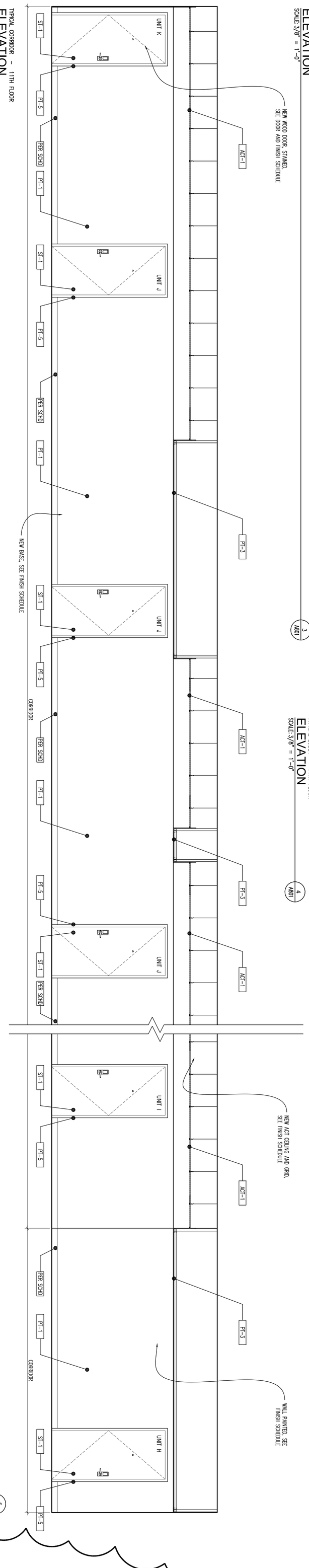

TYPICAL LOBBY - 11TH FLOOR
ELEVATION
SCALE: 3/8" = 1'-0"

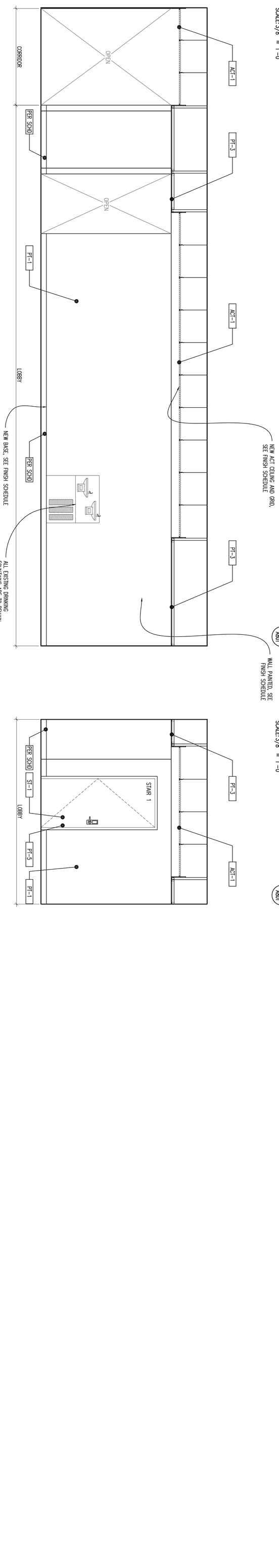

TYPICAL LOBBY - 11TH FLOOR
ELEVATION
SCALE: 3/8" = 1'-0"

TYPICAL LOBBY - 11TH FLOOR
ELEVATION
SCALE: 3/8" = 1'-0"

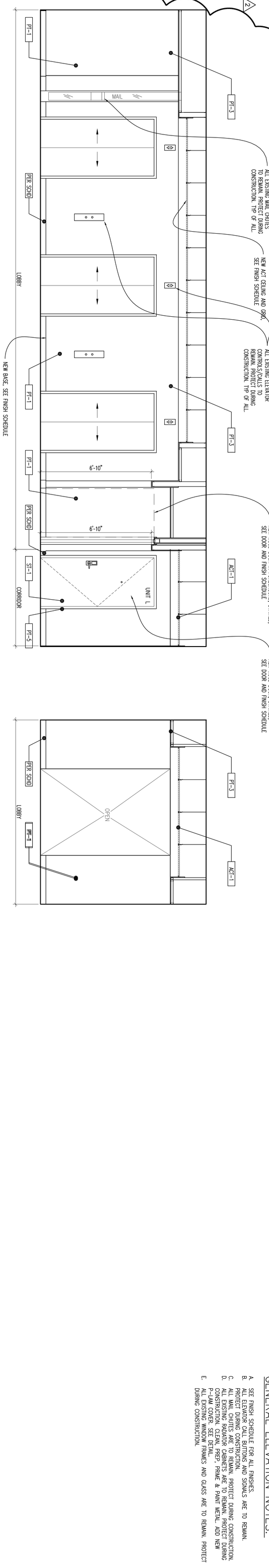

GENERAL ELEVATION NOTES:

A. SEE FINISH SCHEDULE FOR ALL FINISHES.
B. ALL ELEVATOR CALL BUTTONS AND SIGNALS ARE TO REMAIN. PROTECT DURING CONSTRUCTION.
C. ALL MAIL CHUTES ARE TO REMAIN. PROTECT DURING CONSTRUCTION.
D. ALL EXISTING RADIATOR CABINETS ARE TO REMAIN. PROTECT DURING CONSTRUCTION. CLEAN, PREP, PRIME & PAINT METAL. ADD NEW P-LAM COVER. SEE DETAIL.
E. ALL EXISTING WINDOW FRAMES AND GLASS ARE TO REMAIN. PROTECT DURING CONSTRUCTION.

A801

Project: Formica Building
115. E 5th Street
Cincinnati, Ohio 45202

No.	Revisions	Date
2	ENG CHG #1	11.14.2022

Sheet Title: INTERIOR ELEVATIONS - Common Apartment Hallways
Construction

Project No. 2022_259 Issue Date
Scale As Noted Drawn Checked

Formica Building

Office/Apartments

Auditor Address: 115 E. 5th Street, Actual Address: 120 E. 4th Street
Cincinnati OH 45202

modelgroup
DEVELOPMENT • CONSTRUCTION • MANAGEMENT
1826 Race Street
Cincinnati, Ohio 45202
513.559.0048

STATE OF OHIO
JOSEPH A. BODKIN
313367
REGISTERED ARCHITECT
Joseph A. Bodkin, License #313367
Expiration Date: 12.31.2023

GENERAL ELEVATION NOTES:

A. SEE FINISH SCHEDULE FOR ALL FINISHES.
B. ALL ELEVATOR CALL BUTTONS AND SIGNALS ARE TO REMAIN. PROTECT DURING CONSTRUCTION.
C. ALL MAIL CHUTES ARE TO REMAIN. PROTECT DURING CONSTRUCTION.
D. ALL EXISTING RADIATOR CABINETS ARE TO REMAIN. PROTECT DURING CONSTRUCTION. CLEAN, PREP, PRIME & PAINT METAL. ADD NEW P-LAM COVER. SEE DETAIL.
E. ALL EXISTING WINDOW FRAMES AND GLASS ARE TO REMAIN. PROTECT DURING CONSTRUCTION.

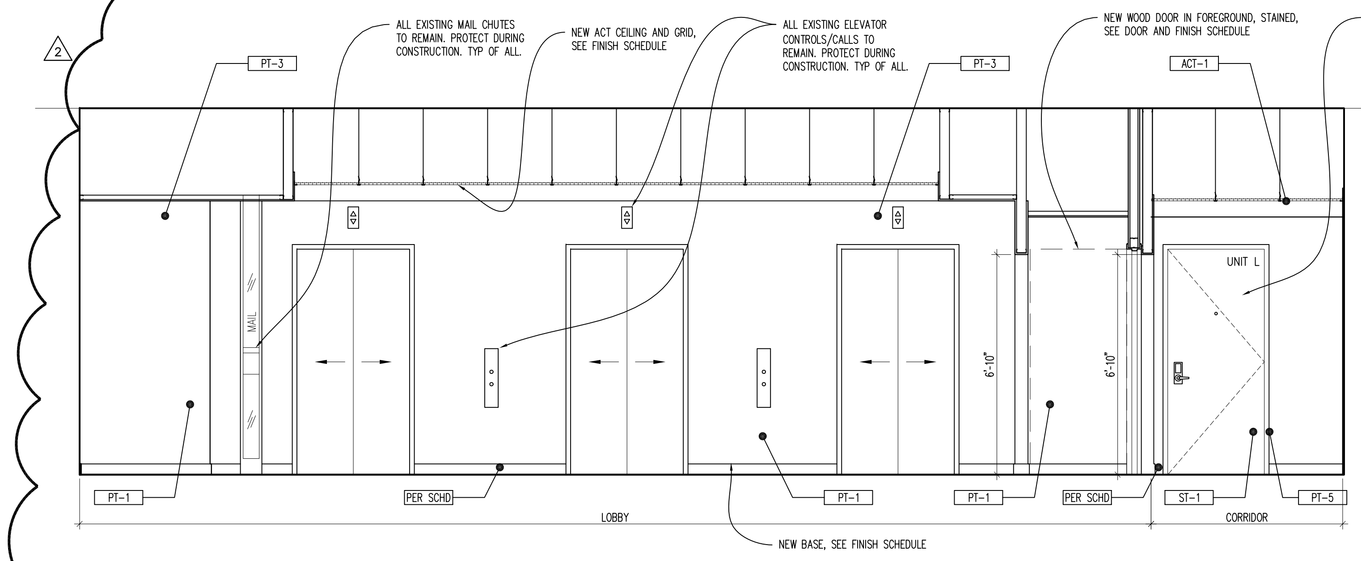

TYPICAL LOBBY – 12TH FLOOR
ELEVATION
SCALE: 3/8" = 1'-0"
1 A801

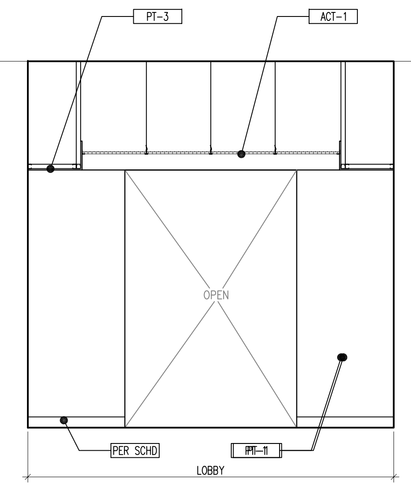

TYPICAL LOBBY – 12TH FLOOR
ELEVATION
SCALE: 3/8" = 1'-0"
2 A801

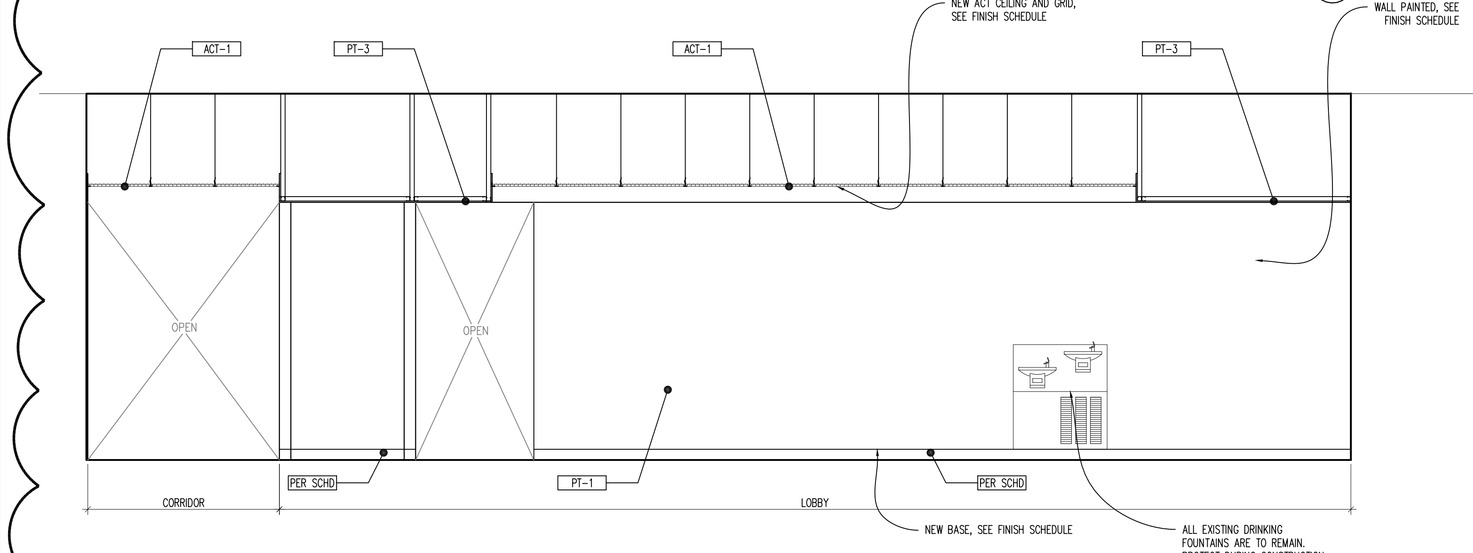

TYPICAL LOBBY – 12TH FLOOR
ELEVATION
SCALE: 3/8" = 1'-0"
3 A801

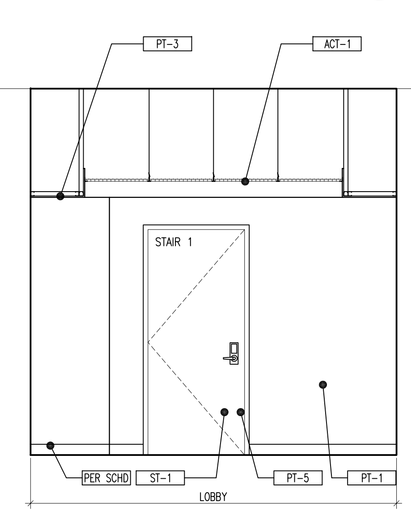

TYPICAL LOBBY – 12TH FLOOR
ELEVATION
SCALE: 3/8" = 1'-0"
4 A801

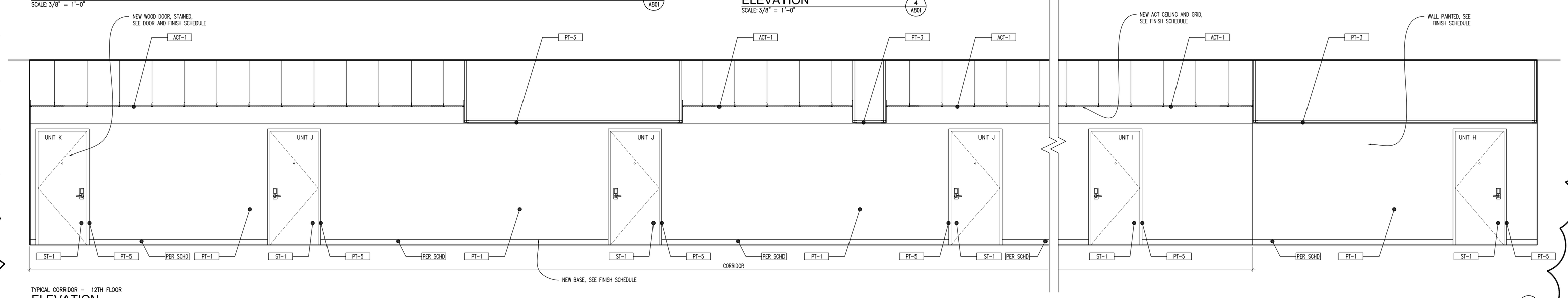

TYPICAL CORRIDOR – 12TH FLOOR
ELEVATION
SCALE: 3/8" = 1'-0"
5 A801

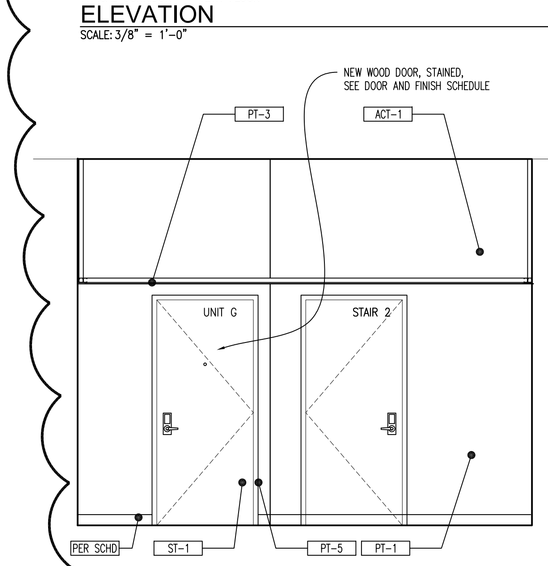

TYPICAL CORRIDOR – 12TH FLOOR
ELEVATION
SCALE: 3/8" = 1'-0"
6 A801

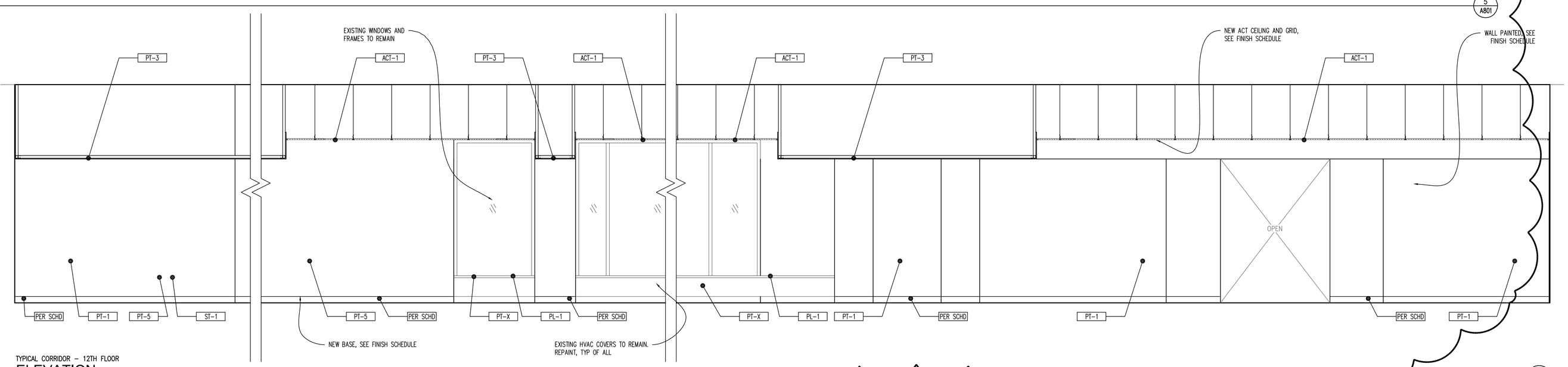

TYPICAL CORRIDOR – 12TH FLOOR
ELEVATION
SCALE: 3/8" = 1'-0"
7 A801

STATE OF OHIO
JOSEPH A. BODKIN
3135567
REGISTERED ARCHITECT
Joseph A. Bodkin, License #3135567
Expiration Date: 12.31.2023

modelgroup
DEVELOPMENT • CONSTRUCTION • MANAGEMENT
1826 Race Street
Cincinnati, Ohio 45202
513.559.0048

Formica Building
Office/Apartments
Auditor Address: 115 E. 5th Street, Actual Address: 120 E. 4th Street
Cincinnati OH 45202

No.	Revisions	Date
2	ENG CHG #1	11.14.2022

Project: Formica Building
115. E 5th Street
Cincinnati, Ohio 45202
Sheet Title: INTERIOR ELEVATIONS – Common Apartment Hallways
Construction
Issue Date
Project No: 2022_259
Scale: As Noted
Drawn
Checked

A802

APPROVED
CIN BD
2022P03573
02/01/23
city of CINCINNATI
BUILDINGS & INSPECTIONS

C:\Users\jacobsh\Dropbox\00 - NUVO_Projects\00_From 1st\1_PHASE C\CAD\a - Phase C - From 1st\08_Formica_A800.dwg A802 Plot Date/Time: Nov 14, 2022 - 3:51pm - By: jacobsh

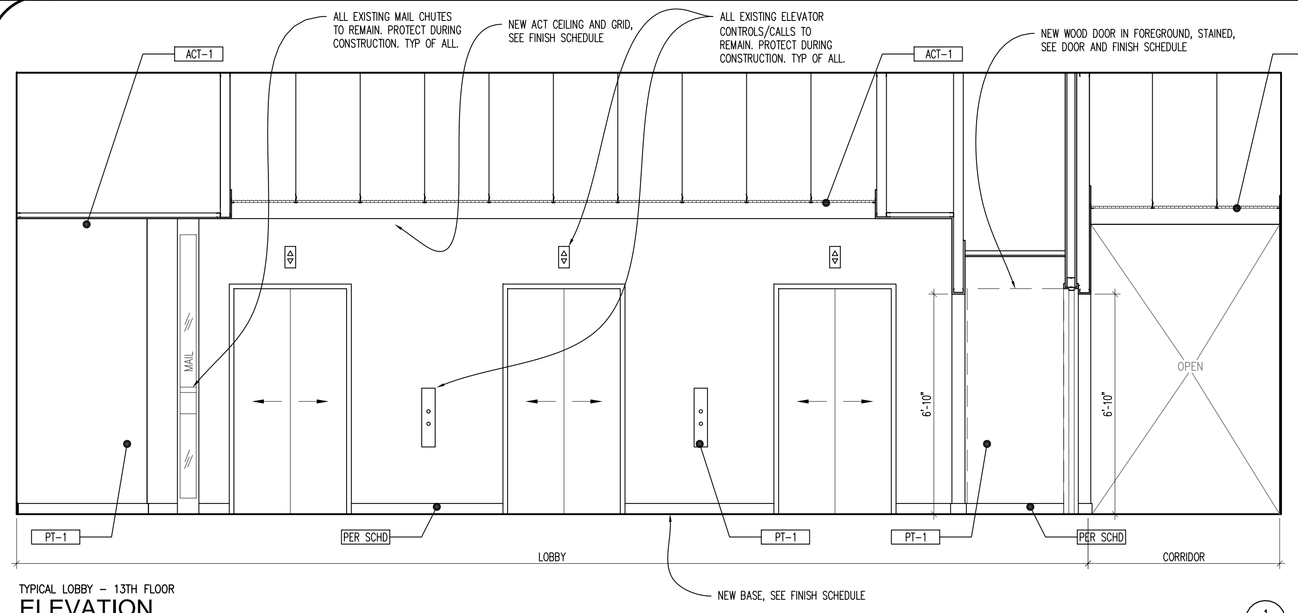

TYPICAL LOBBY – 13TH FLOOR
ELEVATION
SCALE: 3/8" = 1'-0"
1 A802

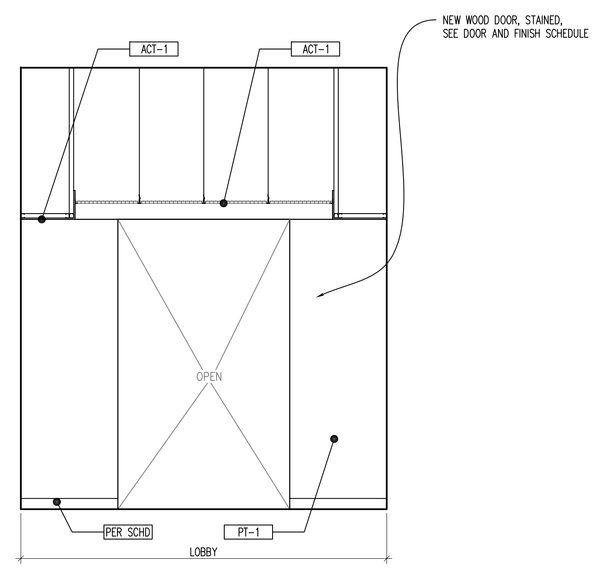

TYPICAL LOBBY – 13TH FLOOR
ELEVATION
SCALE: 3/8" = 1'-0"
2 A802

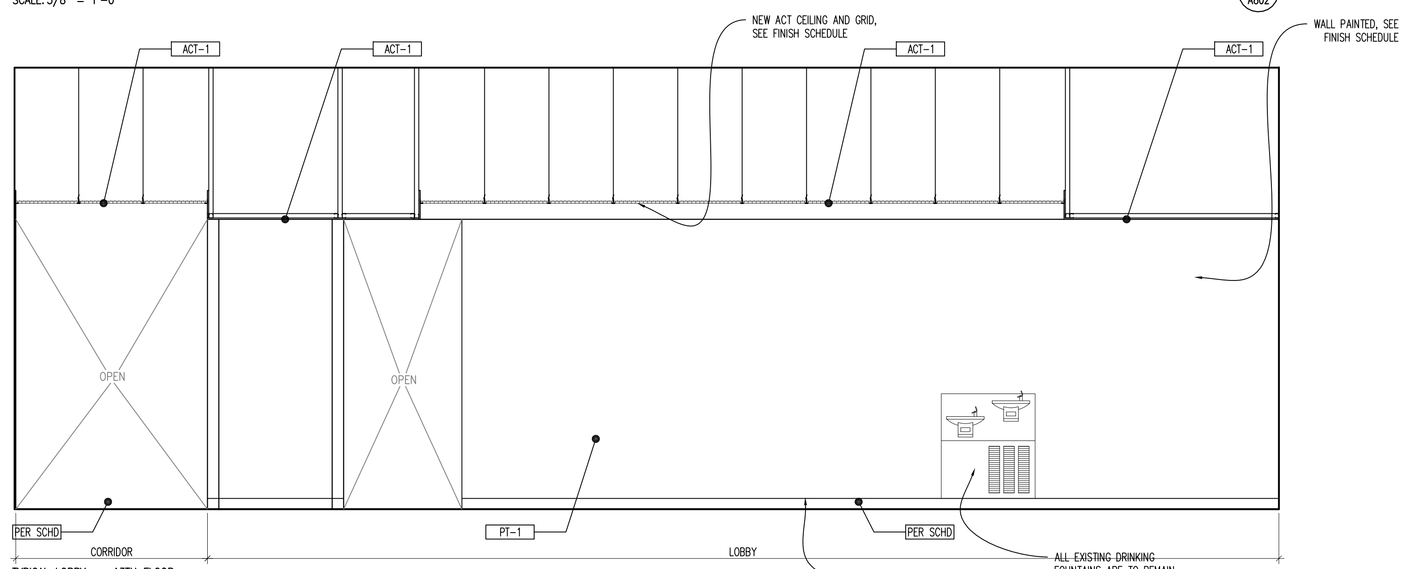

TYPICAL LOBBY – 13TH FLOOR
ELEVATION
SCALE: 3/8" = 1'-0"
3 A802

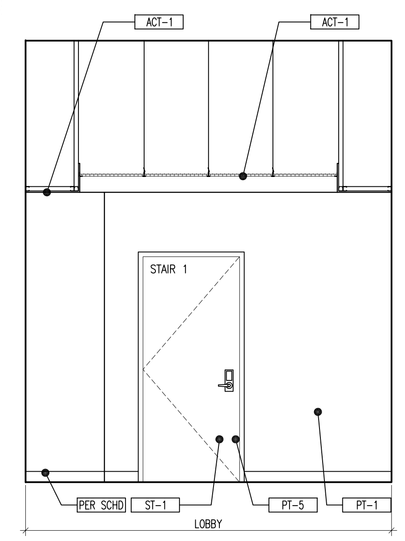

TYPICAL LOBBY – 13TH FLOOR
ELEVATION
SCALE: 3/8" = 1'-0"
4 A802

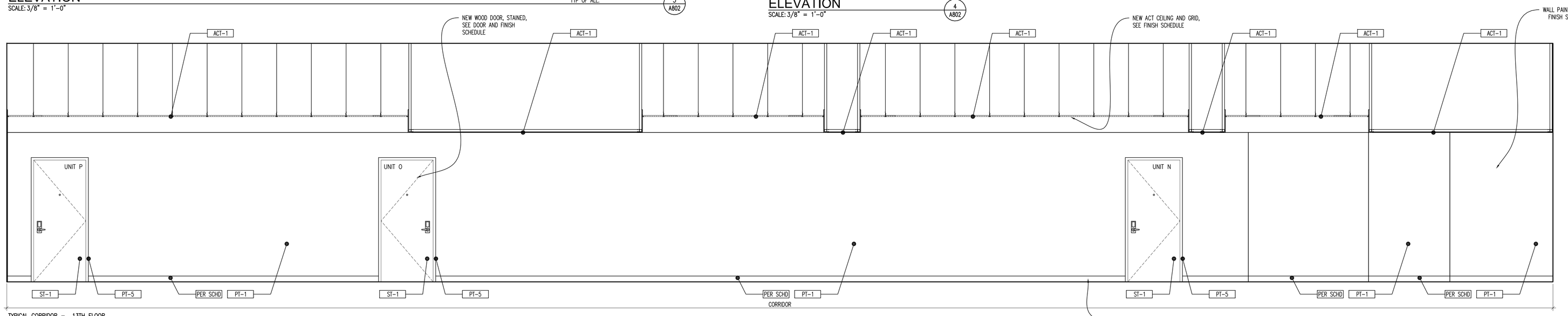

TYPICAL CORRIDOR – 13TH FLOOR
ELEVATION
SCALE: 3/8" = 1'-0"
5 A802

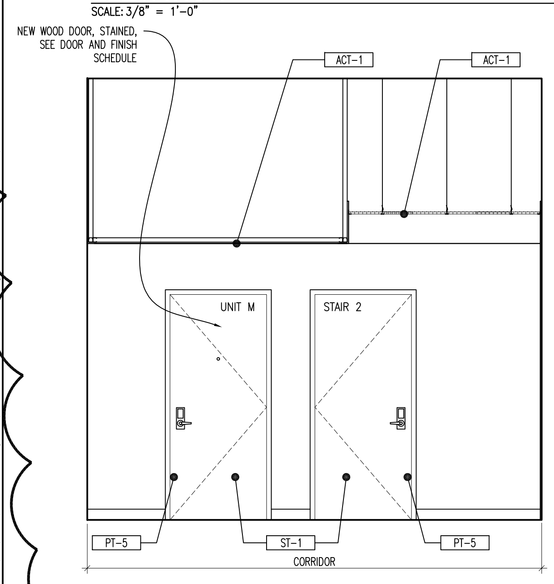

TYPICAL CORRIDOR – 13TH FLOOR
ELEVATION
SCALE: 3/8" = 1'-0"
6 A802

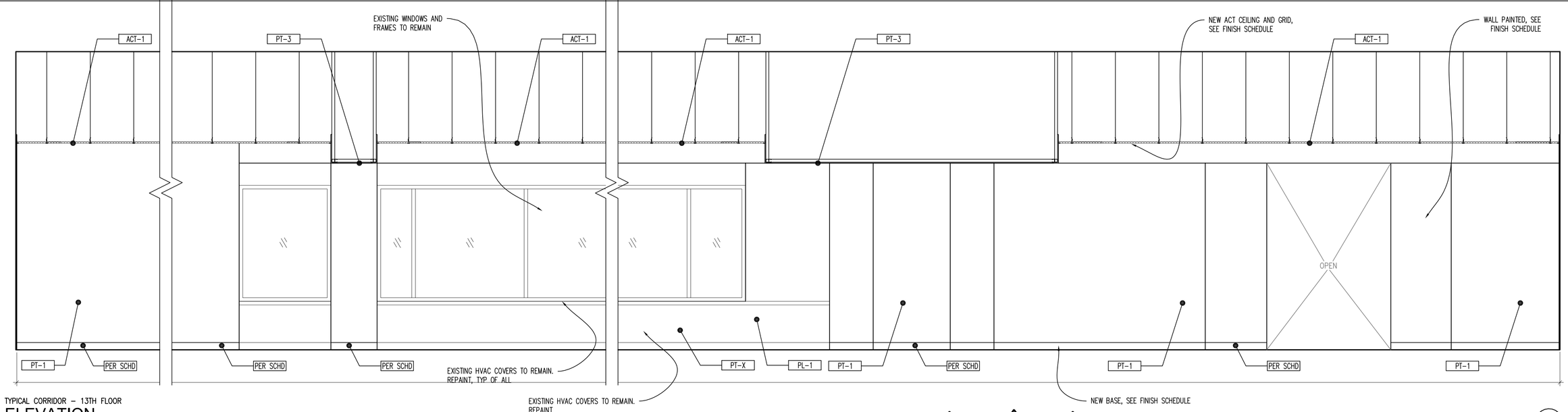

TYPICAL CORRIDOR – 13TH FLOOR
ELEVATION
SCALE: 3/8" = 1'-0"
7 A802

GENERAL ELEVATION NOTES:

A. SEE FINISH SCHEDULE FOR ALL FINISHES.
B. ALL ELEVATOR CALL BUTTONS AND SIGNALS ARE TO REMAIN. PROTECT DURING CONSTRUCTION.
C. ALL MAIL CHUTES ARE TO REMAIN. PROTECT DURING CONSTRUCTION.
D. ALL EXISTING RADIATOR CABINETS ARE TO REMAIN. PROTECT DURING CONSTRUCTION. CLEAN, PREP, PRIME & PAINT METAL. ADD NEW P-LAM COVER: SEE DETAIL.
E. ALL EXISTING WINDOW FRAMES AND GLASS ARE TO REMAIN. PROTECT DURING CONSTRUCTION.

STATE OF OHIO JOSEPH A. BODKIN 3135567 REGISTERED ARCHITECT
Joseph A. Bodkin, License #3135567
Expiration Date: 12.31.2023

modelgroup
DEVELOPMENT • CONSTRUCTION • MANAGEMENT
1826 Race Street
Cincinnati, Ohio 45202
513.559.0048

Formica Building
Office/Apartments
Auditor Address: 115 E. 5th Street, Actual Address: 120 E. 4th Street
Cincinnati OH 45202

No.	Revisions	Date
2	ENG CHG #1	11.14.2022

Project: Formica Building
115. E 5th Street
Cincinnati, Ohio 45202
Sheet Title: INTERIOR ELEVATIONS – Common Apartment Hallways
Construction
Project No: 2022_259
Issue Date
Scale: As Noted
Drawn
Checked

A803

APPROVED
CIN BD
2022P03573
02/01/23
city of CINCINNATI BUILDINGS & INSPECTIONS

C:\Users\jbodkin\Dropbox\01_NBDG_Projects\01_Active\Formica_Apts\Revit\06_Formica_A803.rvt Plot Date/Time: Nov 14, 2022-2:52pm – By: jbodkin

GENERAL FINISH NOTES:

A. IN ALL STAIRWELLS CLEAN, SCRAPE, PRIME AND PAINT ALL HANDRAILS, STRINGER, RISERS & TREAD NOSING. COLOR TBD
B. IN ALL STAIRWELLS CLEAN, SCRAPE, PRIME AND PAINT ALL TREADS W/ ANTI SLIP PAINT. COLOR TBD
C. ALL EXISTING CONCRETE FLOORS ARE TO BE CLEANED OF ALL ADHESIVES DOWN TO ORIGINAL CONCRETE SURFACE.

TYPICAL OFFICE FLOOR (3-6) COMMON AREA -FINISH SCHEDULE

ROOM MARK	ROOM NAME	FLOOR	BASE	WALLS NORTH	WALLS SOUTH	WALLS EAST	WALLS WEST	CEILING	REMARKS	REV. NO.
	STAIR #1	EX	EX	PT-1	PT-1	PT-1	PT-1	PT-3	--	
300	HALL (STAIR #2)	CONC.	RB-1	PT-1	PT-1	PT-1	PT-1	PT-3	--	
301	OPEN-SPACE	CONC.	RB-1	PT-1	PT-1	PT-1	PT-1	ACT-2	--	
302	CORRIDOR	CONC.	RB-1	PT-1	PT-1	PT-1	PT-1	PT-3 / ACT-1	--	
303	TEL ROOM	CONC.	RB-2	PT-1	PT-1	PT-1	PT-1	PT-3	--	
304	JANITOR ROOM	CONC.	RB-2	PT-1	PT-1	PT-1	PT-1	PT-3	--	
305	ELECTRIC ROOM	CONC.	RB-2	PT-1	PT-1	PT-1	PT-1	PT-3	--	
306	WOMENS ROOM	EX	EX	PT-1	PT-1	PT-1	PT-1	ACT-1	--	
307	MENS ROOM	EX	EX	PT-1	PT-1	PT-1	PT-1	ACT-1	--	
308	ELEVATOR LOBBY	CONC.	RB-1	PT-1	PT-1	PT-1	PT-1	PT-3 / ACT-1	--	
	STAIR #2	EX	EX	PT-1	PT-1	PT-1	PT-1	PT-3	--	

2

MATERIALS SCHEDULE

CODE	MATERIAL	MANUF.	NUMBER	DESCRIPTION	SIZE	REMARKS	LOCATION
ACT-1	ACOUSTICAL CEILING TILE	ARMSTRONG	266	BRIGHTON	24"x 24", 15/16"GRID		PER DWGS
ACT-2	ACOUSTICAL CEILING TILE	ARMSTRONG	266	BRIGHTON	24"x 48", 15/16"GRID		PER DWGS
LVT-1	VINYL TILE	LG HAUSYS	TBD	PIKES PEAK	12"x24"	RUN IN DIRECTION SHOWN ON DWGS	PER DWGS
CT-1	CERAMIC TILE	DAL-TILE	TBD	TBD	12" X 12"	GROUT: TBD	PER DWGS
CTB-1	CERAMIC TILE	DAL-TILE	TBD	TBD	12" X 12"	GROUT: TBD	PER DWGS
CONC	CONCRETE			POLISHED & SEALED CONCRETE		CLEAN ALL ADHESIVES TO BARE SURFACE	PER DWGS
RB-1	RUBBER BASE	FLEXCO	TBD	TBD	4-1/2" H		PER DWGS
RB-2	RUBBER BASE	FLEXCO	TBD	TBD	4-1/2" H		PER DWGS
PT-1	PAINT	SHERWIN WILLIAMS	TBD	TBD	N/A		PER DWGS
PT-2	PAINT	SHERWIN WILLIAMS	TBD	TBD	N/A		PER DWGS
PT-3	PAINT	SHERWIN WILLIAMS	SW 7000	IBIS WHITE	FINISH: FLAT		CEILINGS/SOFFITS
ST-1	STAIN	SHERWIN WILLIAMS	SW	TBD	N/A		DOORS
VCT-1	VINYL COMPOSITION TILE	ARMSTRONG	51839	FORTRESS WHITE	12" X 12"		SUPPORT SPACES
QTZ-1	QUARTZ	TBD	TBD	3cm	V.I.F.		APARTMENT KITCHENS & BATHS COUNTERTOPS
PL-1	PLASTIC LAMINATE	FORMICA	TBD	TBD	V.I.F.		RADIATOR COVERS, TYP OF ALL U.N.O.

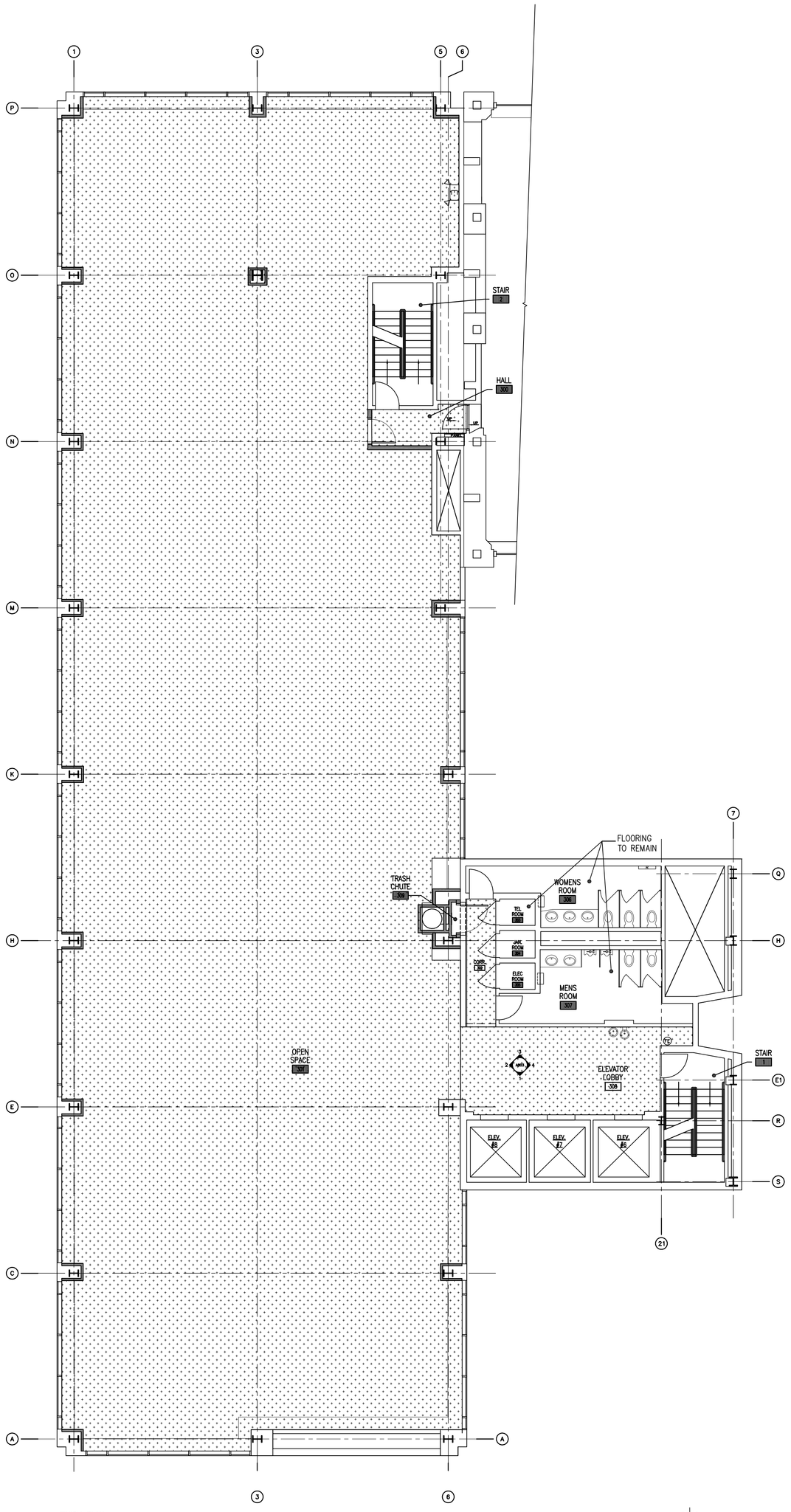

FINISH PLAN
TYPICAL OFFICE FLOOR PLAN - FLOORS 3RD - 6TH
SCALE: 1/8" = 1'-0"
1 A900

N

STATE OF OHIO
JOSEPH A. BODKIN
3135567
REGISTERED ARCHITECT
Joseph A. Bodkin, License #3135567
Expiration Date: 12.31.2023

modelgroup
DEVELOPMENT • CONSTRUCTION • MANAGEMENT
1826 Race Street
Cincinnati, Ohio 45202
513.559.0048

Formica Building
Office/Apartments
Auditor Address: 115 E. 5th Street, Actual Address: 120 E. 4th Street
Cincinnati OH 45202

Project
Formica Building
115 E. 5th Street
Cincinnati, Ohio 45202

No.	Revisions	Date
2	ENG CHG #1	11.14.2022

Sheet Title
TYPICAL OFFICE FLOOR (3 - 6) FINISH PLAN

Project No: 2022_259
Issue Date
Scale: As Noted
Drawn
Checked

A900

APPROVED
CIN BD
2022P03573
02/01/23
city of CINCINNATI BUILDINGS & INSPECTIONS

C:\Users\jbodkin\Dropbox\01_MGG_Projects\09_Formica_A900.dwg-A900, Plot Date/Time: Nov 14, 2022-3:53pm - By: jbodkin
G:\From 1en1_PHASE C\CADs - Phase C - From 1en1\09_Formica_A900.dwg

TYPICAL RESIDENTIAL FLOOR (6-10) COMMON AREA -FINISH SCHEDULE

ROOM MARK	ROOM NAME	FLOOR	BASE	WALLS NORTH	WALLS SOUTH	WALLS EAST	WALLS WEST	CEILING	REMARKS	REV. NO.
1006	CORRIDOR	LVT-1	RB-1	PT-1	PT-1	PT-1	PT-1	PT-3 / ACT-1	--	
1009	CORRIDOR	LVT-1	RB-1	PT-1	PT-1	PT-1	PT-1	PT-3 / ACT-1	--	
	STAIR #1	EX	EX	PT-1	PT-1	PT-1	PT-1	PT-3	--	
1011	HALL (STAIR #2)	CONC.	RB-1	PT-1	PT-1	PT-1	PT-1	PT-3	--	
1012	TRASH CHUTE	CONC.	RB-2	PT-1	PT-1	PT-1	PT-1	PT-3	--	
1013	CORRIDOR	LVT-1	RB-1	PT-1	PT-1	PT-1	PT-1	PT-3 / ACT-1	--	
1014	TEL ROOM	CONC.	RB-2	PT-1	PT-1	PT-1	PT-1	PT-3	--	
1015	JANITOR ROOM	CONC.	RB-2	PT-1	PT-1	PT-1	PT-1	PT-3	--	
1016	ELECTRIC ROOM	CONC.	RB-2	PT-1	PT-1	PT-1	PT-1	PT-3	--	
1017	MECHANICAL	EX	EX	PT-1	PT-1	PT-1	PT-1	EXPOSED	--	
1018	MECHANICAL	EX	EX	PT-1	PT-1	PT-1	PT-1	EXPOSED	--	
1019	ELEVATOR LOBBY	LVT-1	RB-1	PT-1	PT-1	PT-1	PT-1	PT-3 / ACT-1	--	
	STAIR #2	EX	EX	PT-1	PT-1	PT-1	PT-1	PT-3	--	

GENERAL FINISH NOTES:

A. IN ALL STAIRWELLS CLEAN, SCRAPE, PRIME AND PAINT ALL HANDRAILS, STRINGER, RISERS & TREAD NOSING. COLOR TBD

B. IN ALL STAIRWELLS CLEAN, SCRAPE, PRIME AND PAINT ALL TREADS W/ ANTI SLIP PAINT. COLOR TBD

C. ALL EXISTING CONCRETE FLOORS ARE TO BE CLEANED OF ALL ADHESIVES DOWN TO ORIGINAL CONCRETE SURFACE.

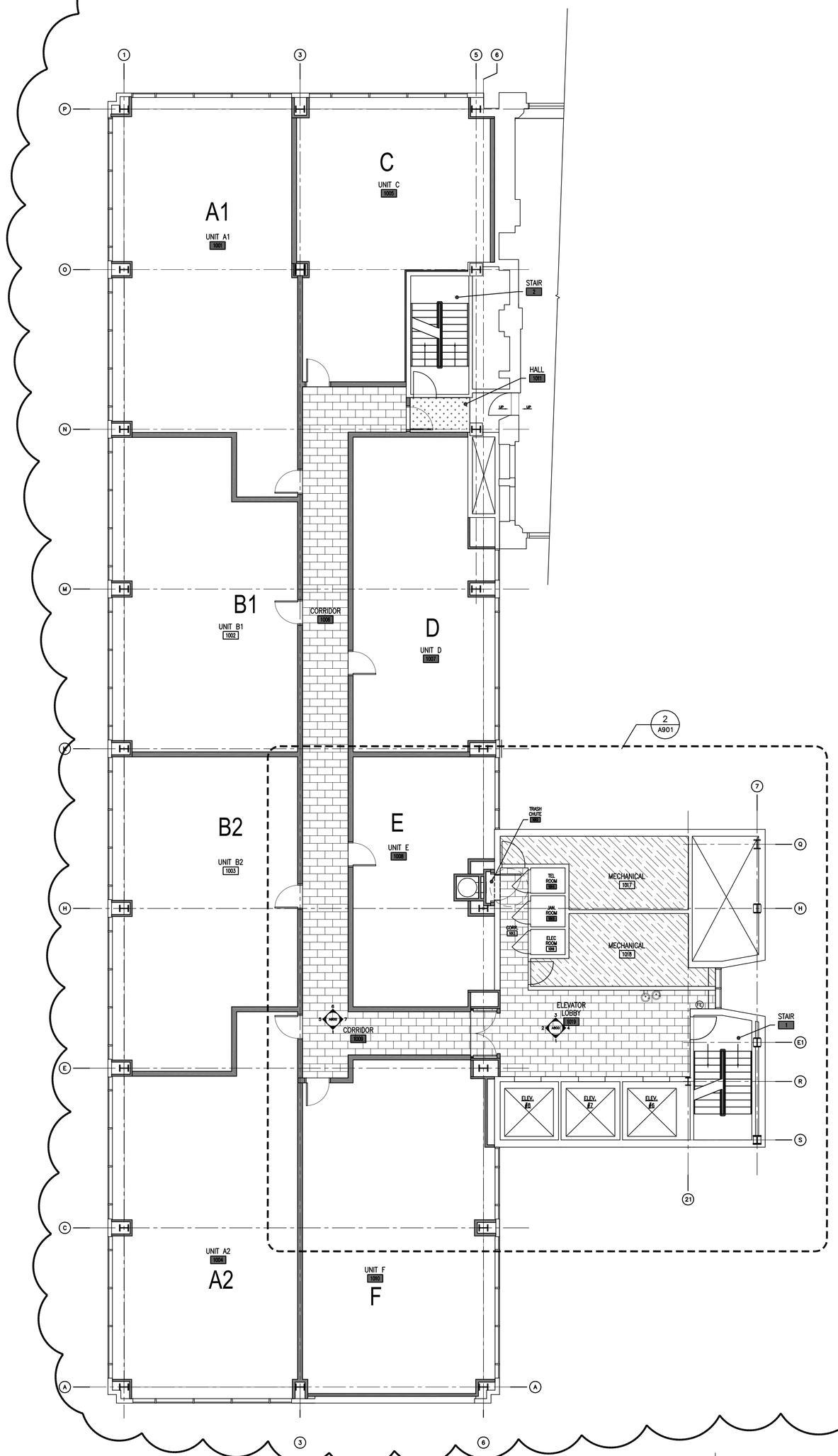

FINISH PLAN
TYPICAL RESIDENTIAL FLOOR PLAN - FLOORS 7TH - 10TH
SCALE: 1/8" = 1'-0"
1 A901

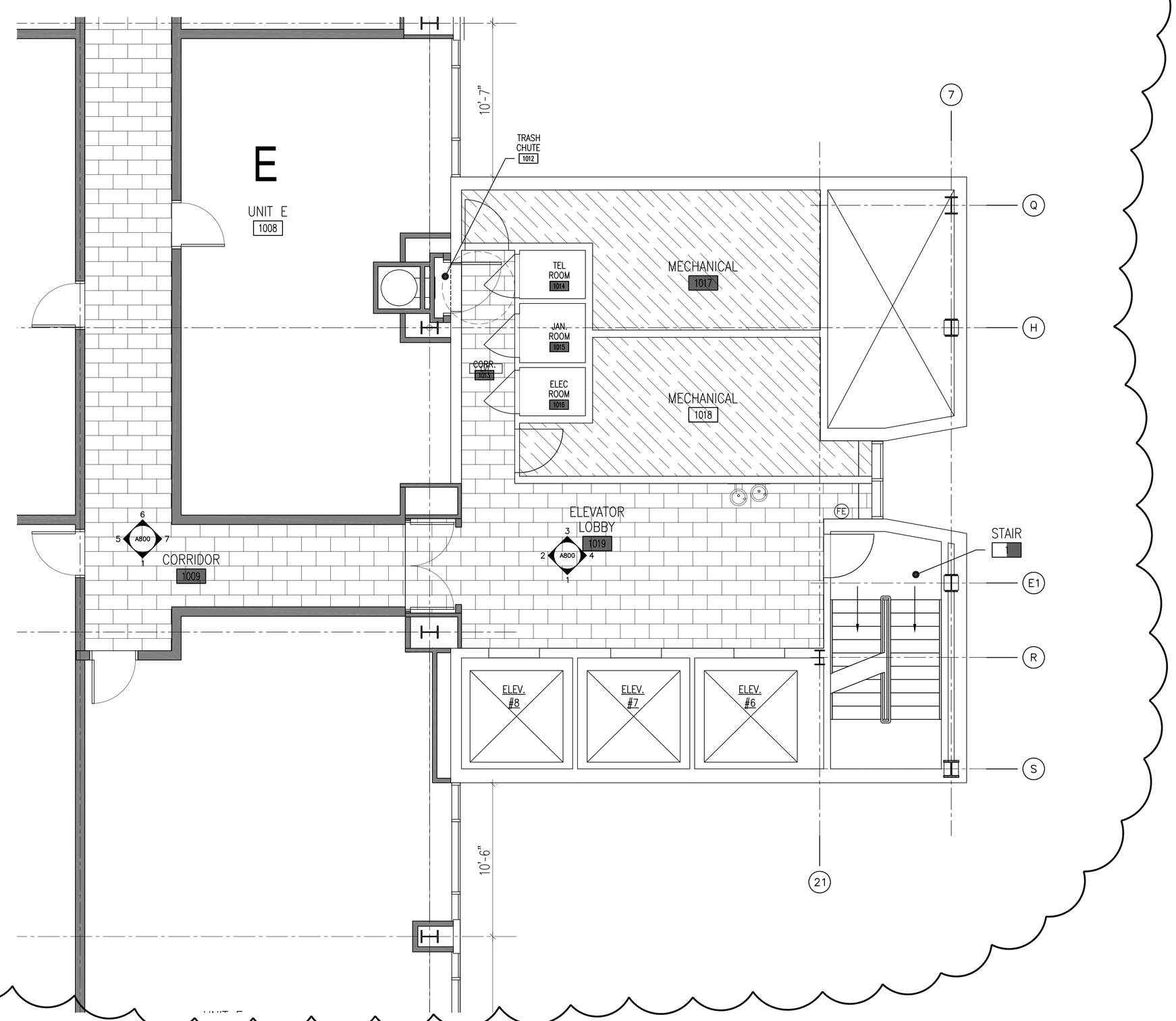

TYPICAL OF ALL
ENLARGED CORRIDOR FINISH PLAN
SCALE: 1/4" = 1'-0"
2 A901

STATE OF OHIO
JOSEPH A. BODKIN
3135567
REGISTERED ARCHITECT
Joseph A. Bodkin, License #3135567
Expiration Date: 12.31.2023

modelgroup
DEVELOPMENT • CONSTRUCTION • MANAGEMENT
1826 Race Street
Cincinnati, Ohio 45202
513.559.0048

Formica Building
Office/Apartments
Auditor Address: 115 E. 5th Street, Actual Address: 120 E. 4th Street
Cincinnati OH 45202

No.	Revisions	Date
2	ENG CHG #1	11.14.2022

Project: Formica Building
115 E. 5th Street
Cincinnati, Ohio 45202
Sheet Title: TYPICAL RESIDENTIAL FLOOR (7-10) FINISH PLAN
Project No: 2022_259
Issue Date
Scale: As Noted
Drawn
Checked

A901

APPROVED
CIN BD
2022P03573
02/01/23
cityof CINCINNATI BUILDINGS & INSPECTIONS

C:\Users\jbodkin\Dropbox\01_MGG_Projects\Formica Bldg\From Ken_PHASE C\CADs - Phase C - From Ken\09_Formica_A900.dwg-A901, Plot Date/Time: Nov 14, 2022-3:53pm - By: jbodkin

TYPICAL RESIDENTIAL FLOOR (11-12) COMMON AREA -FINISH SCHEDULE

ROOM MARK	ROOM NAME	FLOOR	BASE	WALLS NORTH	WALLS SOUTH	WALLS EAST	WALLS WEST	CEILING	REMARKS	REV. NO.
1109	CORRIDOR	LVT-1	RB-1	PT-1	PT-1	PT-1	PT-1	PT-3 / ACT-1	--	
	STAIR #1	EX	EX	PT-1	PT-1	PT-1	PT-1	PT-3	--	
1110	HALL (STAIR #2)	CONC.	RB-1	PT-1	PT-1	PT-1	PT-1	PT-3	--	
1111	TRASH CHUTE	CONC.	RB-2	PT-1	PT-1	PT-1	PT-1	PT-3	--	
1112	CORRIDOR	LVT-1.	RB-1	PT-1	PT-1	PT-1	PT-1	PT-3 / ACT-1	--	
1113	TEL ROOM	CONC.	RB-2	PT-1	PT-1	PT-1	PT-1	PT-3	--	
1114	JANITOR ROOM	CONC.	RB-2	PT-1	PT-1	PT-1	PT-1	PT-3	--	
1115	ELECTRIC ROOM	CONC.	RB-2	PT-1	PT-1	PT-1	PT-1	PT-3	--	
1116	MECHANICAL	EX	EX	PT-1	PT-1	PT-1	PT-1	EXPOSED	--	
1117	MECHANICAL	EX	EX	PT-1	PT-1	PT-1	PT-1	EXPOSED	--	
1118	ELEVATOR LOBBY	LVT-1	RB-1	PT-1	PT-1	PT-1	PT-1	PT-3 / ACT-1	--	
	STAIR #2	EX	EX	PT-1	PT-1	PT-1	PT-1	PT-3	--	

GENERAL FINISH NOTES:

A. IN ALL STAIRWELLS CLEAN, SCRAPE, PRIME AND PAINT ALL HANDRAILS, STRINGER, RISERS & TREAD NOSING. COLOR TBD
B. IN ALL STAIRWELLS CLEAN, SCRAPE, PRIME AND PAINT ALL TREADS W/ ANTI SLIP PAINT. COLOR TBD
C. ALL ESTING CONCRETE FLOORS ARE TO BE CLEANED OF ALL ADHESIVES DOWN TO ORIGINAL CONCRETE SURFACE.

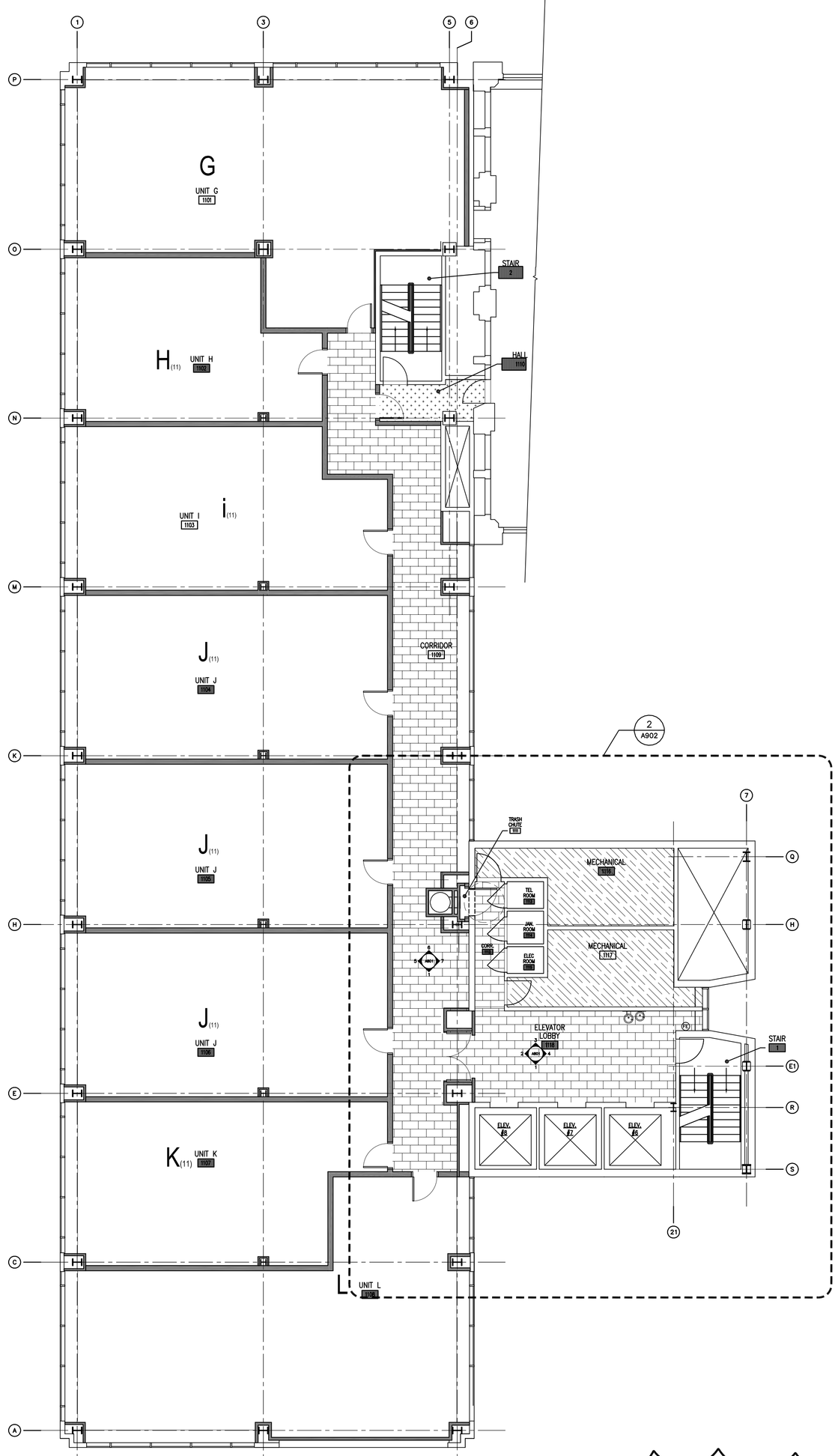

FINISH PLAN
TYPICAL RESIDENTIAL FLOOR PLAN - FLOORS 11TH - 12TH
SCALE: 1/8" = 1'-0"
1 A902

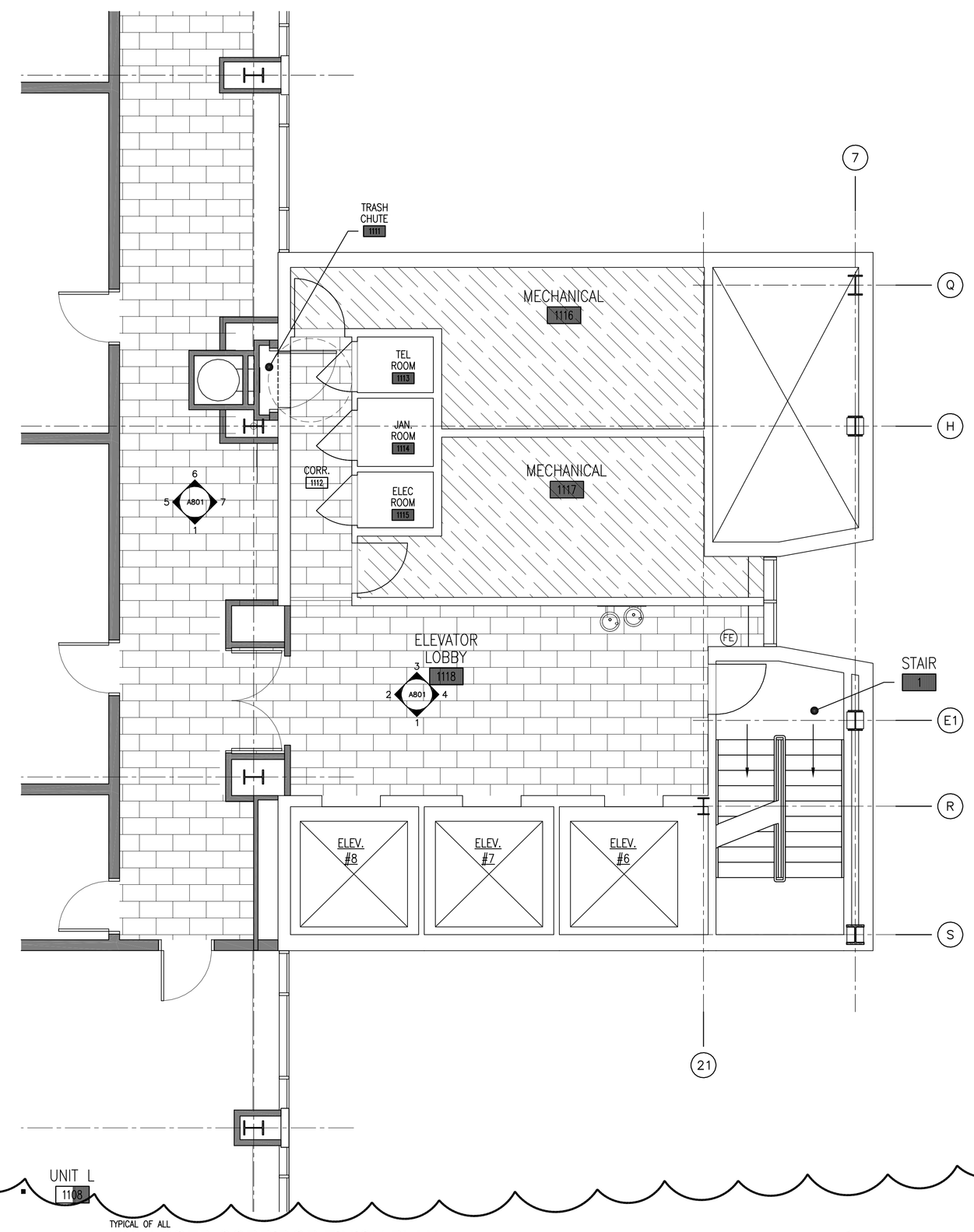

TYPICAL OF ALL
ENLARGED CORRIDOR FINISH PLAN
SCALE: 1/4" = 1'-0"
2 A902

STATE OF OHIO JOSEPH A. BODKIN 3135567 REGISTERED ARCHITECT
Joseph A. Bodkin, License #3135567
Expiration Date: 12.31.2023

modelgroup
DEVELOPMENT • CONSTRUCTION • MANAGEMENT
1826 Race Street
Cincinnati, Ohio 45202
513.559.0048

Formica Building
Office/Apartments
Auditor Address: 115 E. 5th Street, Actual Address: 120 E. 4th Street
Cincinnati OH 45202

No.	Revisions	Date
2	ENG CHG #1	11.14.2022

Project: Formica Building
115 E. 5th Street
Cincinnati, Ohio 45202
Sheet Title: TYPICAL RESIDENTIAL FLOOR (11-12) FINISH PLAN
Project No: 2022_259 Issue Date
Scale: As Noted Drawn Checked

A902

APPROVED
CIN BD
2022P03573
02/01/23
city of CINCINNATI BUILDINGS & INSPECTIONS

C:\Users\jbodkin\Dropbox\01_MBG_Projects\09_FORMICA\CADs - Phase C - From 1st\1_PHASE C\CADs - From 1st\09_Formica_A800.dwg-A902, Plot Date/Time: Nov 14, 2022-3:54pm - By: jbodkin

TYPICAL RESIDENTIAL FLOOR (13) COMMON AREA -FINISH SCHEDULE

ROOM MARK	ROOM NAME	FLOOR	BASE	WALLS NORTH	WALLS SOUTH	WALLS EAST	WALLS WEST	CEILING	REMARKS	REV. NO.
	STAIR #1	EX	EX	PT-1	PT-1	PT-1	PT-1	PT-3	--	
1305	HALL (STAIR #2)	CONC.	RB-1	PT-1	PT-1	PT-1	PT-1	PT-3	--	
1306	CORRIDOR	LVT-1	RB-1	PT-1	PT-1	PT-1	PT-1	PT-3 / ACT-1	--	
1307	TRASH CHUTE	CONC.	RB-2	PT-1	PT-1	PT-1	PT-1	PT-3	--	
1308	CORRIDOR	LVT-1	RB-1	PT-1	PT-1	PT-1	PT-1	PT-3 / ACT-1	--	
1309	TEL ROOM	CONC.	RB-2	PT-1	PT-1	PT-1	PT-1	PT-3	--	
1310	JANITOR ROOM	CONC.	RB-2	PT-1	PT-1	PT-1	PT-1	PT-3	--	
1311	ELECTRIC ROOM	CONC.	RB-2	PT-1	PT-1	PT-1	PT-1	PT-3	--	
1312	MECHANICAL	EX	EX	PT-1	PT-1	PT-1	PT-1	EXPOSED	--	
1313	MECHANICAL	EX	EX	PT-1	PT-1	PT-1	PT-1	EXPOSED	--	
1314	ELEVATOR LOBBY	LVT-1	RB-1	PT-1	PT-1	PT-1	PT-1	PT-3 / ACT-1	--	
	STAIR #2	EX	EX	PT-1	PT-1	PT-1	PT-1	PT-3	--	

GENERAL FINISH NOTES:

A. IN ALL STAIRWELLS CLEAN, SCRAPE, PRIME AND PAINT ALL HANDRAILS, STRINGER, RISERS & TREAD NOSING. COLOR TBD
B. IN ALL STAIRWELLS CLEAN, SCRAPE, PRIME AND PAINT ALL TREADS W/ ANTI SLIP PAINT. COLOR TBD
C. ALL EXISTING CONCRETE FLOORS ARE TO BE CLEANED OF ALL ADHESIVES DOWN TO ORIGINAL CONCRETE SURFACE.

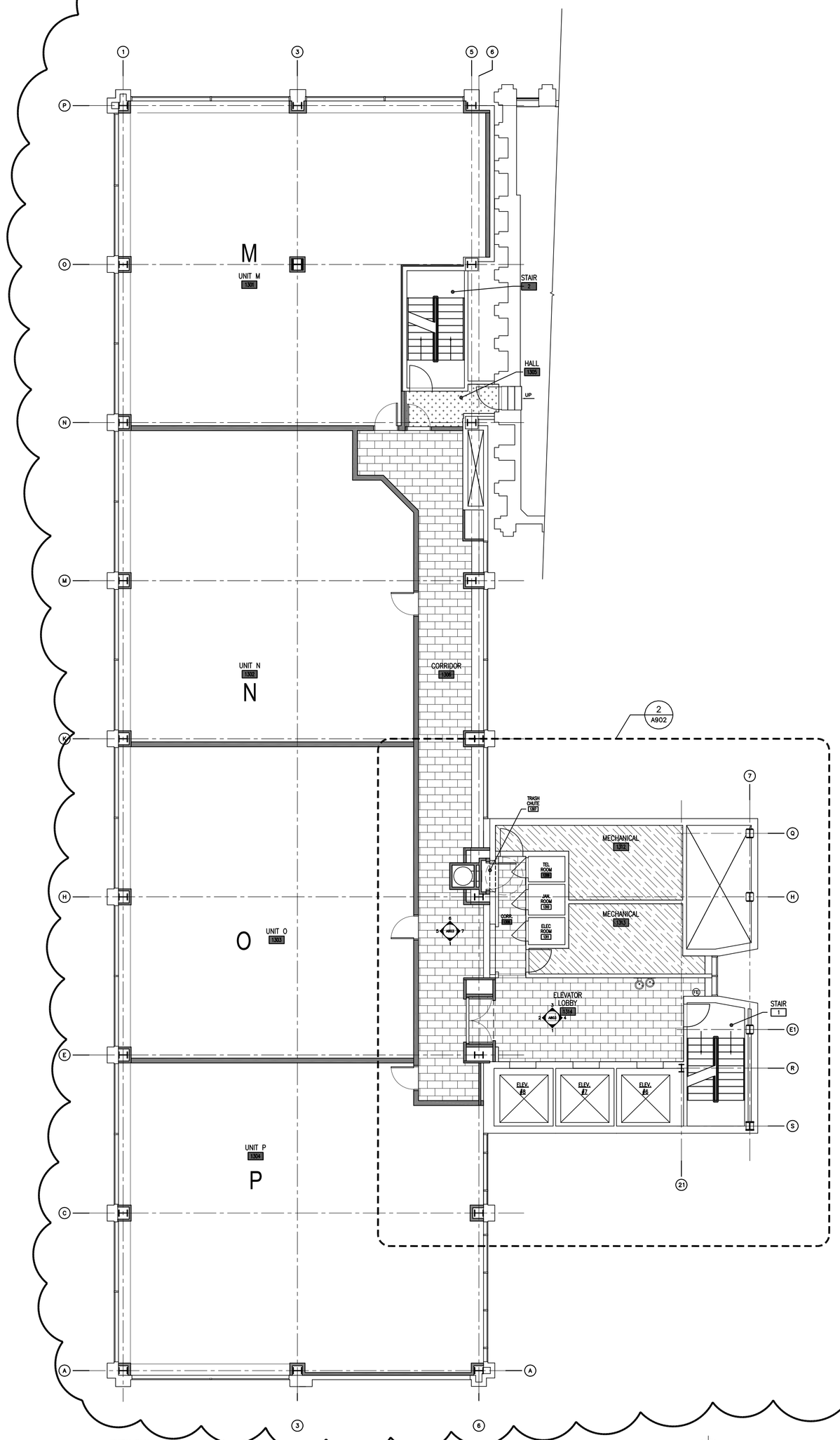

FINISH PLAN
TYPICAL RESIDENTIAL FLOOR PLAN - FLOOR 13TH
SCALE: 1/8" = 1'-0"

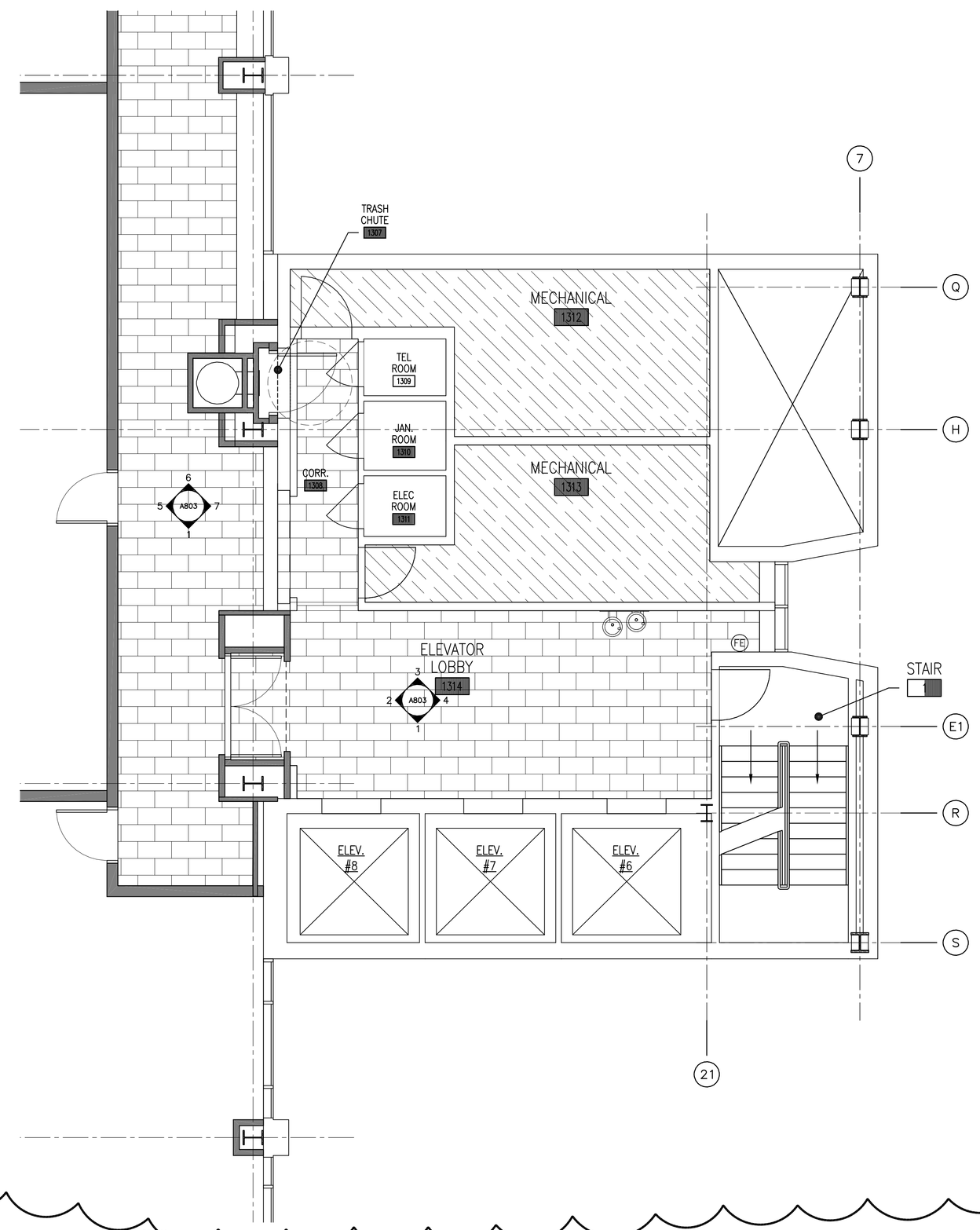

TYPICAL OF (4)
ENLARGED CORRIDOR FINISH PLAN
SCALE: 1/4" = 1'-0"

STATE OF OHIO
JOSEPH A. BODKIN
315567
REGISTERED ARCHITECT
Joseph A. Bodkin, License #315567
Expiration Date: 12.31.2023

modelgroup
DEVELOPMENT • CONSTRUCTION • MANAGEMENT
1826 Race Street
Cincinnati, Ohio 45202
513.559.0048

Formica Building
Office/Apartments
Auditor Address: 115 E. 5th Street, Actual Address: 120 E. 4th Street
Cincinnati OH 45202

No.	Revisions	Date
2	ENG CHG #1	11.14.2022

Project: Formica Building
115 E. 5th Street
Cincinnati, Ohio 45202
Sheet Title: TYPICAL RESIDENTIAL FLOOR (13) FINISH PLAN
Project No: 2022_259
Issue Date:
Scale: As Noted
Drawn:
Checked:

A903

APPROVED
CIN BD
2022P03573
02/01/23
city of CINCINNATI
BUILDINGS & INSPECTIONS

C:\Users\jbodkin\Dropbox\01_ABSC_Projects\2022_Projects\From Ten\1_PHASE C\CADs - Phase C - From Ten\09_Formica_A903.dwg-A903, Plot Date/Time: Nov 14, 2022-3:55pm - By: jbodkin